AZƏRBAYCAN RESPUBLİKASININ
NƏQLİYYAT, RABİTƏ VƏ YÜKSƏK TEXNOLOGİYALAR NAZİRLİYİ
DÖVLƏT MÜLKİ AVİASİYA AGENTLİYİ

Ə M R

№ 53

Bakı şəhəri "28" oktyabr 2020

"Azerbaijan Aviation Rules – Radio Navigation Aids" adlı sənədə düzəlişin qüvvəyə minməsi barədə

Beynəlxalq Mülki Aviasiya Təşkilatının "COVID-19" pandemiyası şəraitində fəaliyyətə dair 2020-ci il 11 may tarixli tövsiyəsini tətbiq etmək məqsədilə "Azerbaijan Aviation Rules – Radio Navigation Aids" ("Azərbaycan Aviasiya Qaydaları – Radionaviqasiya vasitələri") adlı sənədin 1-ci nəşrinə 01 saylı düzəliş işlənib hazırlanmışdır.

Sözügedən düzəlişin tətbiqini təmin etmək məqsədilə "Azərbaycan Respublikasının Nəqliyyat, Rabitə və Yüksək Texnologiyalar Nazirliyi yanında Dövlət Mülki Aviasiya Agentliyi haqqında Əsasnamə"nin 5.6.6-cı yarımbəndini rəhbər tutaraq, **əmr edirəm:**

1. "Azerbaijan Aviation Rules – Radio Navigation Aids" sənədinin 1-ci nəşrinə 01 saylı düzəliş 09.11.2020-ci il tarixindən qüvvəyə minsin.
2. Sənəddə göstərilən tələblərə uyğun olaraq bütün zəruri prosedurların tətbiqi təmin edilsin.
3. Sənədin DMAA-nın və "Mülki Aviasiyada Uçuşların Təhlükəsizliyi üzrə Dövlət Müfəttişliyi"nin aidiyyəti mütəxəssisləri tərəfindən öyrənilməsi və bütün zəruri prosedurların təmin edilməsi təşkil edilsin.
4. Sənədin yenilənmiş versiyası DMAA-nın rəsmi internet saytında yerləşdirilsin.
5. Əmr bütün şəxsi heyətə çatdırılsın.
6. Əmrin icrasına nəzarət direktorun müavini Hacıağa Əliyevə həvalə edilsin.

Direktor **Arif Məmmədov**

APPROVED
by SCAA Director Order
№ 53 dd. 28 October 2020

AZERBAIJAN AVIATION RULES – RADIO NAVIGATION AIDS (AAR-AT I)

State Civil Aviation Agency of the Republic of Azerbaijan

Document № AAR-ANS-016

Edition № 01

Effective date: 05.NOV.2020

Revision № 01, dd. 09.NOV.2020

Baku

https://www.caa.gov.az

0. ADMINISTRATION AND CONTROL OF THE DOCUMENT

0.1. TABLE OF CONTENT

0. ADMINISTRATION AND CONTROL OF THE DOCUMENT 1

0.1. Table of Content 1

0.2. List of Effective Pages 5

0.3. Distribution Control 8

0.4. Record of Amendments and Revisions 9

0.5. Terms Shall, Should, May 10

0.6. Administration and Control 10

1. DEFINITIONS 1

2. GENERAL PROVISIONS FOR RADIO NAVIGATION AIDS 1

2.1. Standard Radio Navigation Aids 1

2.2. Ground and Flight Testing 2

2.3. Provision of Information on the Operational Status of Radio Navigation Services 3

2.4. Power Supply for Radio Navigation Aids and Communication Systems 3

2.5. Human Factors Considerations 3

3. SPECIFICATIONS FOR RADIO NAVIGATION AIDS 1

3.1. Specification for ILS 1

3.1.1. Definitions 1

3.1.2. Basic Requirements 3

3.1.3. VHF Localizer and Associated Monitor 5

3.1.4. Interference Immunity Performance for ILS Localizer Receiving Systems 18

3.1.5. UHF Glide Path Equipment and Associated Monitor 19

3.1.6. Localizer and Glide Path Frequency Pairing 27

3.1.7. VHF Marker Beacons 28

3.2. Specification for Precision Approach Radar System 31

3.2.3. The Precision Approach Radar Element (PAR) 32

3.2.4. The Surveillance Radar Element (SRE) 33

3.3. Specification for VHF Omnidirectional Radio Range (VOR) 34

3.3.1. General 34

3.3.2. Radio Frequency 35

3.3.3. Polarization and Pattern Accuracy 35

3.3.4. Coverage 35

3.3.5. Modulations of Navigational Signals 36

3.3.6. Voice and Identification....37
3.3.7. Monitoring....38
3.3.8. Interference Immunity Performance for VOR Receiving Systems....38
3.4 Specification for Non-Directional Radio Beacon (NDB)....39
3.4.1. Definitions....39
3.4.2. Coverage....40
3.4.3. Limitations in Radiated Power....40
3.4.4. Radio Frequencies....40
3.4.5. Identification....41
3.4.6. Characteristics of Emissions....41
3.4.7. Siting of Locators....42
3.4.8. Monitoring....43
3.5. Specification for UHF Distance Measuring Equipment (DME)....43
3.5.1. Definitions....43
3.5.2. General....45
3.5.3. System Characteristics....47
3.5.4. Detailed Technical Characteristics of Transponder and Associated Monitor....52
3.5.5. Technical Characteristics of Interrogator....63
3.6. Specification for en-route VHF marker beacons (75 MHz)....68
3.6.1. Equipment....68
3.7. Requirements for the Global Navigation Satellite System (GNSS)....69
3.7.1. Definitions....69
3.7.2. General....70
3.7.3. GNSS Elements Specifications....71
3.7.4. Resistance to Interference....83
3.7.5. Database....83
3.8. (Reserved)....86
3.9. System Characteristics of Airborne ADF Receiving Systems....86
3.9.1. Accuracy of Bearing Indication....86
3.10. (Reserved)....86
APPENDIX: TECHNICAL SPECIFICATIONS FOR THE GLOBAL NAVIGATION SATELLITE SYSTEM (GNSS)....1
1. Definitions....1
2. General....1
3. GNSS Elements....1

3.1 Global Positioning System (GPS) Standard Positioning Service (SPS) (L1) 1
3.1.1 Non-aircraft elements.....1
3.1.2 DEFINITIONS OF PROTOCOLS FOR DATA APPLICATION 14
3.1.3 Aircraft elements 19
3.1.4 TIME 19
3.2 Global Navigation Satellite System (GLONASS) Channel of Standard Accuracy (CSA) (L1) 20
3.2.1 NON-AIRCRAFT ELEMENTS.....20
3.2.3 AIRCRAFT ELEMENTS.....33
3.2.4 TIME 34
3.2.5 COORDINATE SYSTEM 35
3.3 Combined use of GPS and GLONASS.....35
3.3.1 AIRCRAFT ELEMENTS.....35
3.4 Aircraft-Based Augmentation System (ABAS) 36
3.5 Satellite-Based Augmentation System (SBAS) 36
3.5.1 GENERAL.....36
3.5.2 RF CHARACTERISTICS 36
3.5.3 DATA STRUCTURE 38
3.5.4 DATA CONTENT 39
3.5.5 DEFINITIONS OF PROTOCOLS FOR DATA APPLICATION 51
3.5.6 MESSAGE TABLES 62
3.5.7 NON-AIRCRAFT ELEMENTS.....68
3.5.8 AIRCRAFT ELEMENTS.....75
3.5.9 INTERFACE BETWEEN SBAS.....85
3.6 Ground-Based Augmentation System (GBAS) and Ground-Based Regional Augmentation System (GRAS).....85
3.6.1 GENERAL.....85
3.6.2 RF CHARACTERISTICS 85
3.6.3 DATA STRUCTURE 87
3.6.4 DATA CONTENT 92
3.6.5 DEFINITIONS OF PROTOCOLS FOR DATA APPLICATION 106
3.6.6 MESSAGE TABLES 116
3.6.7 NON-AIRCRAFT ELEMENTS.....118
3.6.8 AIRCRAFT ELEMENTS.....129
3.7 Resistance to Interference.....139

3.7.1 PERFORMANCE OBJECTIVES 139
3.7.2 CONTINUOUS WAVE (CW) INTERFERENCE 139
3.7.3 BAND-LIMITED NOISE-LIKE INTERFERENCE 141
3.8 GNSS Aircraft Satellite Receiver Antenna 142
3.9 Cyclic Redundancy Check 142

0.2. LIST OF EFFECTIVE PAGES

	Chapter 00	
Page	**Effective date**	**Revision #**
1	05.NOV.2020	00
2	05.NOV.2020	00
3	05.NOV.2020	00
4	05.NOV.2020	00
5	09.NOV.2020	01
6	05.NOV.2020	00
7	05.NOV.2020	00
8	05.NOV.2020	00
9	05.NOV.2020	00
10	05.NOV.2020	00
	Chapter 01	
Page	**Effective date**	**Revision #**
1	05.NOV.2020	00
2	05.NOV.2020	00
	Chapter 02	
Page	**Effective date**	**Revision #**
1	05.NOV.2020	00
2	09.NOV.2020	01
3	05.NOV.2020	00
4	05.NOV.2020	00
	Chapter 03	
Page	**Effective date**	**Revision #**
1	05.NOV.2020	00
2	05.NOV.2020	00
3	05.NOV.2020	00
4	05.NOV.2020	00
5	05.NOV.2020	00
6	05.NOV.2020	00
7	05.NOV.2020	00
8	05.NOV.2020	00
9	05.NOV.2020	00
10	05.NOV.2020	00
11	05.NOV.2020	00
12	05.NOV.2020	00
13	05.NOV.2020	00
14	05.NOV.2020	00
15	05.NOV.2020	00
16	05.NOV.2020	00
17	05.NOV.2020	00
18	05.NOV.2020	00
19	05.NOV.2020	00
20	05.NOV.2020	00
21	05.NOV.2020	00
22	05.NOV.2020	00
23	05.NOV.2020	00
24	05.NOV.2020	00
25	05.NOV.2020	00
26	05.NOV.2020	00
27	05.NOV.2020	00
28	05.NOV.2020	00
29	05.NOV.2020	00
30	05.NOV.2020	00
31	05.NOV.2020	00
32	05.NOV.2020	00
33	05.NOV.2020	00
34	05.NOV.2020	00
35	05.NOV.2020	00
36	05.NOV.2020	00
37	05.NOV.2020	00
38	05.NOV.2020	00
39	05.NOV.2020	00
40	05.NOV.2020	00
41	05.NOV.2020	00
42	05.NOV.2020	00
43	05.NOV.2020	00
44	05.NOV.2020	00
45	05.NOV.2020	00
46	05.NOV.2020	00
47	05.NOV.2020	00
48	05.NOV.2020	00
49	05.NOV.2020	00
50	05.NOV.2020	00
51	05.NOV.2020	00
52	05.NOV.2020	00
53	05.NOV.2020	00
54	05.NOV.2020	00
55	05.NOV.2020	00
56	05.NOV.2020	00
57	05.NOV.2020	00
58	05.NOV.2020	00
59	05.NOV.2020	00
60	05.NOV.2020	00
61	05.NOV.2020	00
62	05.NOV.2020	00
63	05.NOV.2020	00
64	05.NOV.2020	00
65	05.NOV.2020	00
66	05.NOV.2020	00
67	05.NOV.2020	00
68	05.NOV.2020	00
69	05.NOV.2020	00
70	05.NOV.2020	00
71	05.NOV.2020	00
72	05.NOV.2020	00
73	05.NOV.2020	00
74	05.NOV.2020	00
75	05.NOV.2020	00
76	05.NOV.2020	00

77	05.NOV.2020	00
78	05.NOV.2020	00
79	05.NOV.2020	00
80	05.NOV.2020	00
81	05.NOV.2020	00
82	05.NOV.2020	00
83	05.NOV.2020	00
84	05.NOV.2020	00
85	05.NOV.2020	00
86	05.NOV.2020	00
87	05.NOV.2020	00
88	05.NOV.2020	00
	Appendix	
Page	**Effective date**	**Revision #**
1	05.NOV.2020	00
2	05.NOV.2020	00
3	05.NOV.2020	00
4	05.NOV.2020	00
5	05.NOV.2020	00
6	05.NOV.2020	00
7	05.NOV.2020	00
8	05.NOV.2020	00
9	05.NOV.2020	00
10	05.NOV.2020	00
11	05.NOV.2020	00
12	05.NOV.2020	00
13	05.NOV.2020	00
14	05.NOV.2020	00
15	05.NOV.2020	00
16	05.NOV.2020	00
17	05.NOV.2020	00
18	05.NOV.2020	00
19	05.NOV.2020	00
20	05.NOV.2020	00
21	05.NOV.2020	00
22	05.NOV.2020	00
23	05.NOV.2020	00
24	05.NOV.2020	00
25	05.NOV.2020	00
26	05.NOV.2020	00
27	05.NOV.2020	00
28	05.NOV.2020	00
29	05.NOV.2020	00
30	05.NOV.2020	00
31	05.NOV.2020	00
32	05.NOV.2020	00
33	05.NOV.2020	00
34	05.NOV.2020	00
35	05.NOV.2020	00
36	05.NOV.2020	00
37	05.NOV.2020	00

38	05.NOV.2020	00
39	05.NOV.2020	00
40	05.NOV.2020	00
41	05.NOV.2020	00
42	05.NOV.2020	00
43	05.NOV.2020	00
44	05.NOV.2020	00
45	05.NOV.2020	00
46	05.NOV.2020	00
47	05.NOV.2020	00
48	05.NOV.2020	00
49	05.NOV.2020	00
50	05.NOV.2020	00
51	05.NOV.2020	00
52	05.NOV.2020	00
53	05.NOV.2020	00
54	05.NOV.2020	00
55	05.NOV.2020	00
56	05.NOV.2020	00
57	05.NOV.2020	00
58	05.NOV.2020	00
59	05.NOV.2020	00
60	05.NOV.2020	00
61	05.NOV.2020	00
62	05.NOV.2020	00
63	05.NOV.2020	00
64	05.NOV.2020	00
65	05.NOV.2020	00
66	05.NOV.2020	00
67	05.NOV.2020	00
68	05.NOV.2020	00
69	05.NOV.2020	00
70	05.NOV.2020	00
71	05.NOV.2020	00
72	05.NOV.2020	00
73	05.NOV.2020	00
74	05.NOV.2020	00
75	05.NOV.2020	00
76	05.NOV.2020	00
77	05.NOV.2020	00
78	05.NOV.2020	00
79	05.NOV.2020	00
80	05.NOV.2020	00
81	05.NOV.2020	00
82	05.NOV.2020	00
83	05.NOV.2020	00
84	05.NOV.2020	00
85	05.NOV.2020	00
86	05.NOV.2020	00
87	05.NOV.2020	00
88	05.NOV.2020	00

89	05.NOV.2020	00
90	05.NOV.2020	00
91	05.NOV.2020	00
92	05.NOV.2020	00
93	05.NOV.2020	00
94	05.NOV.2020	00
95	05.NOV.2020	00
96	05.NOV.2020	00
97	05.NOV.2020	00
98	05.NOV.2020	00
99	05.NOV.2020	00
100	05.NOV.2020	00
101	05.NOV.2020	00
102	05.NOV.2020	00
103	05.NOV.2020	00
104	05.NOV.2020	00
105	05.NOV.2020	00
106	05.NOV.2020	00
107	05.NOV.2020	00
108	05.NOV.2020	00
109	05.NOV.2020	00
110	05.NOV.2020	00
111	05.NOV.2020	00
112	05.NOV.2020	00
113	05.NOV.2020	00
114	05.NOV.2020	00
115	05.NOV.2020	00
116	05.NOV.2020	00
117	05.NOV.2020	00
118	05.NOV.2020	00
119	05.NOV.2020	00
120	05.NOV.2020	00
121	05.NOV.2020	00
122	05.NOV.2020	00
123	05.NOV.2020	00
124	05.NOV.2020	00
125	05.NOV.2020	00
126	05.NOV.2020	00
127	05.NOV.2020	00
128	05.NOV.2020	00
129	05.NOV.2020	00
130	05.NOV.2020	00
131	05.NOV.2020	00
132	05.NOV.2020	00

133	05.NOV.2020	00
134	05.NOV.2020	00
135	05.NOV.2020	00
136	05.NOV.2020	00
137	05.NOV.2020	00
138	05.NOV.2020	00
139	05.NOV.2020	00
140	05.NOV.2020	00
141	05.NOV.2020	00
142	05.NOV.2020	00
143	05.NOV.2020	00
144	05.NOV.2020	00
145	05.NOV.2020	00
146	05.NOV.2020	00
147	05.NOV.2020	00
148	05.NOV.2020	00
149	05.NOV.2020	00
150	05.NOV.2020	00
151	05.NOV.2020	00
152	05.NOV.2020	00
153	05.NOV.2020	00
154	05.NOV.2020	00
155	05.NOV.2020	00
156	05.NOV.2020	00
157	05.NOV.2020	00
158	05.NOV.2020	00
159	05.NOV.2020	00
160	05.NOV.2020	00

0.3. DISTRIBUTION CONTROL

Copy #	Type of Copy	Department	Title
Master	**(S)**	Quality Control and Rulemaking	Head of QC & Rulemaking Department
1	**(S)**	SCAA Q-Pulse	Head of QC & Rulemaking Department
2	**(S)**	SCAA official web-site	Specialist of QC & Rulemaking Department

(S) Soft Copy - (electronic version)
(H) Hard Copy – (printed version)

Note: *Electronic and hard copies are considered "uncontrolled" if they are printed or not included into this distribution list.*

0.4. RECORD OF AMENDMENTS AND REVISIONS

Edition/ Revision №:	Date of Edition/ Revision:	Inserted by:	Para/ Page	Effective date:
Edition № 01	05.11.2020	ANS Department	all	05.11.2020

Edition: *Release of a document having incorporated all previous revisions until the current version. New edition of a document will not show revised text in blue color. Current edition of a document shown on each page in footer.*

Revision: *A change made to a part of document, where it is reflected with blue text or accompanied with a vertical line on right side of a document. Basic information on revisions (number and date) given in the List of effective Pages and indicated in header of affected page and in context itself.*

0.5. TERMS SHALL, SHOULD, MAY

The following terms shall have the meaning outlined below:

“Shall” - An action verb in the imperative sense means that the application of a rule or procedure or provision is mandatory.

“Should” - Means that the application of a procedure or provision is recommended.

“May” - Means that the application of a procedure or provision is optional.

0.6. ADMINISTRATION AND CONTROL

This document is published as a book on A4-sized sheets. The PDF files will be locked and signed to prevent changes.

This document is regularly revised and amended. All personnel must be familiarized with all revisions done.

This document will be Amended and Revised in accordance with requirements of “Documentation and Control” procedure.

1. DEFINITIONS

Note 1: *All references to "Radio Regulations" are to the Radio Regulations published by the International Telecommunication Union (ITU). Radio Regulations are amended from time to time by the decisions embodied in the Final Acts of World Radiocommunication Conferences held normally every two to three years. Further information on the ITU processes as they relate to aeronautical radio system frequency use is contained in the Handbook on Radio Frequency Spectrum Requirements for Civil Aviation including statement of approved ICAO policies (Doc 9718).*

Note 2: *These Aviation Regulations includes Standards and Recommendations for certain forms of equipment for air navigation aids. While Air Navigation Service Provider (ANSP) will determine the necessity for specific installations in accordance with the conditions prescribed in these regulations, review of the need for specific installation is carried out periodically by SCAA, ordinarily on the basis of recommendations of Regional Air Navigation Meetings.*

Note 3: *The terminology used in these regulations to refer to instrument approach operations is based on the classification of instrument approach and landing operations.*

When the following terms are used in this regulations, they have the following meanings:

Altitude. The vertical distance of a level, a point or an object considered as a point, measured from mean sea level (MSL).

Area navigation (RNAV). A method of navigation which permits aircraft operation on any desired flight path within the coverage of ground- or space-based navigation aids or within the limits of the capability of self-contained aids, or a combination of these.

Note: *Area navigation includes PBN as well as other operations that do not meet the definition of PBN.*

Effective acceptance bandwidth. The range of frequencies with respect to the assigned frequency for which reception is assured when all receiver tolerances have been taken into account.

Effective adjacent channel rejection. The rejection that is obtained at the appropriate adjacent channel frequency when all relevant receiver tolerances have been taken into account.

Elevation. The vertical distance of a point or a level, on or affixed to the surface of the earth, measured from mean sea level.

Essential radio navigation service. A radio navigation service whose disruption has a significant impact on operations in the affected airspace or aerodrome.

Fan marker beacon. A type of radio beacon, the emissions of which radiate in a vertical fan-shaped pattern.

Height. The vertical distance of a level, a point or an object considered as a point, measured from a specified datum.

Human Factors principles. Principles which apply to design, certification, training, operations and maintenance and which seek safe interface between the human and other system components by proper consideration to human performance.

Mean power (of a radio transmitter). The average power supplied to the antenna transmission line by a transmitter during an interval of time sufficiently long compared with the lowest frequency encountered in the modulation taken under normal operating conditions.

Note: *A time of 1/10 second during which the mean power is greatest will be selected normally.*

Navigation specification. A set of aircraft and flight crew requirements needed to support performance-based navigation operations within a defined airspace. There are two kinds of navigation specification:

Required navigation Performance (RNP) specification. A navigation specification based on area navigation that includes the requirement for performance monitoring and alerting, designated by the prefix RNP, e.g. RNP 4, RNP APCH.

Area navigation (RNAV) specification. A navigation specification based on area navigation that does not include the requirement for performance monitoring and alerting, designated by the prefix RNAV, e.g. RNAV 5, RNAV 1.

Note 1: *The* Performance-based Navigation (PBN) Manual *(Doc 9613), Volume II, contains detailed guidance on navigation specifications.*

Note 2: *The term RNP is solely used in the context of navigation specifications that require performance monitoring and alerting, e.g. RNP 4 refers to the aircraft and operating requirements, including a 4 NM lateral performance with on-board performance monitoring and alerting that are detailed in Doc 9613.*

Performance-based navigation (PBN). Area navigation based on performance requirements for aircraft operating along an ATS route, on an instrument approach procedure or in a designated airspace.

Note: *Performance requirements are expressed in navigation specifications (RNAV specification, RNP specification) in terms of accuracy, integrity, continuity, availability and functionality needed for the proposed operation in the context of a particular airspace concept.*

Pressure-altitude. An atmospheric pressure expressed in terms of altitude which corresponds to that pressure in the Standard Atmosphere.

Protected service volume. A part of the facility coverage where the facility provides a particular service in accordance with relevant SARPs and within which the facility is afforded frequency protection.

Radio navigation service. A service providing guidance information or position data for the efficient and safe operation of aircraft supported by one or more radio navigation aids.

Touchdown. The point where the nominal glide path intercepts the runway.

Note: *"Touchdown" as defined above is only a datum and is not necessarily the actual point at which the aircraft will touch the runway.*

Z marker beacon. A type of radio beacon, the emissions of which radiate in a vertical cone-shaped pattern.

2. GENERAL PROVISIONS FOR RADIO NAVIGATION AIDS

2.1. STANDARD RADIO NAVIGATION AIDS

2.1.1. The standard radio navigation aids shall be:

a) the instrument landing system (ILS) conforming to the Standards contained in Chapter 3, 3.1;
b) the global navigation satellite system (GNSS) conforming to the Standards contained in Chapter 3, 3.7.
c) the VHF omnidirectional radio range (VOR) conforming to the Standards contained in Chapter 3, 3.3;
d) the non-directional radio beacon (NDB) conforming to the Standards contained in Chapter 3, 3.4;
e) the distance measuring equipment (DME) conforming to the Standards contained in Chapter 3, 3.5; and
f) the en-route VHF marker beacon conforming to the Standards contained in Chapter 3, 3.6.

Note 1: *Since visual reference is essential for the final stages of approach and landing, the installation of a radio navigation aid does not obviate the need for visual aids to approach and landing in conditions of low visibility.*

Note 2: *It is intended that introduction and application of radio navigation aids to support precision approach and landing operations will be in accordance with the strategy shown in GM. It is intended that rationalization of conventional radio navigation aids and evolution toward supporting performance-based navigation will be in accordance with the strategy shown in .*

Note 3: *Categories of precision approach and landing operations are classified in AAR-OPS.*

Note 4: *Information on operational objectives associated with ILS facility performance categories is given in Given in GM on the application of the SARPs for radio navigation aids, 2.1 and 2.14.*

2.1.2. Differences in radio navigation aids in any respect from the Standards of Chapter 3 shall be published in an Aeronautical Information Publication (AIP).

2.1.3. Wherever there is installed a radio navigation aid that is neither an ILS nor an MLS, but which may be used in whole or in part with aircraft equipment designed for use with the ILS or MLS, full details of parts that may be so used shall be published in an Aeronautical Information Publication (AIP).

Note: *This provision is to establish a requirement for promulgation of relevant information rather than to authorize such installations.*

2.1.4. GNSS-specific provisions

2.1.4.1. It shall be permissible to terminate a GNSS satellite service provided by one of its elements (Chapter 3, 3.7.2) on the basis of at least a six-year advance notice by a service provider.

2.1.4.2. **Recommendation. —** *A State that approves GNSS-based operations should ensure that GNSS data relevant to those operations are recorded*.

Note 1: *These recorded data are primarily intended for use in accident and incident investigations. They may also support periodic confirmation that accuracy, integrity, continuity and availability are maintained within the limits required for the operations approved.*

Note 2: *Information on the recording of GNSS parameters is contained in GM on application GNSS standards and recommended practices, 11.*

2.1.4.3. **Recommendation. —** *Recordings should be retained for a period of at least 14 days. When the recordings are pertinent to accident and incident investigations, they should be retained for longer periods until it is evident that they will no longer be required*.

2.1.5. Precision approach radar

2.1.5.1. A precision approach radar (PAR) system, where installed and operated as a radio navigation aid together with equipment for two-way communication with aircraft and facilities for the efficient coordination of these elements with air traffic control, shall conform to the Standards contained in Chapter 3, 3.2.

Note 1: *The precision approach radar (PAR) element of the precision approach radar system may be installed and operated without the surveillance radar element (SRE), when it is determined that the SRE is not necessary to meet the requirements of air traffic control for the handling of aircraft.*

Note 2: *Although SRE is not considered, in any circumstances, a satisfactory alternative to the precision approach radar system, the SRE may be installed and operated without the PAR for the assistance of air traffic control in handling aircraft intending to use a radio navigation aid, or for surveillance radar approaches and departures.*

2.1.6. Recommendation. — *When a radio navigation aid is provided to support precision approach and landing, it should be supplemented, as necessary, by a source or sources of guidance information which, when used in conjunction with appropriate procedures, will provide effective guidance to, and efficient coupling (manual or automatic) with, the desired reference path*.

Note: *DME, GNSS, NDB, VOR and aircraft navigation systems have been used for such purposes.*

2.2. GROUND AND FLIGHT TESTING

2.2.1. Radio navigation aids of the types covered by the specifications in Chapter 3 and available for use by aircraft engaged in international air navigation shall be the subject of periodic ground and flight tests.

Note 1: *Guidance on the ground and flight testing of ICAO standard facilities, including the periodicity of the testing, is contained in the Manual on Testing of Radio Navigation Aids (Doc 8071).*

Note 2: *In case of deviations from the nominal flight inspection intervals of the radio navigation aids the main available alternatives are the following:*

1) an extension of flight inspection interval;

2) category downgrading of the ILS;

3) temporary removal from service.

Note 3: *Extension of the inspection interval under appropriate conditions should be preferred where possible. With this alleviation, the ANSP shall develop a procedure for monitoring the operation of radio navigation aids by requesting the aircraft crews about the accuracy of the approach.*

2.3. PROVISION OF INFORMATION ON THE OPERATIONAL STATUS OF RADIO NAVIGATION SERVICES

2.3.1. Aerodrome control towers and units providing approach control service shall be provided with information on the operational status of radio navigation services essential for approach, landing and take-off at the aerodrome(s) with which they are concerned, on a timely basis consistent with the use of the service(s) involved.

Note: *Guidance material on the application of this Standard in the case of PBN- based operations supported by GNSS is contained in the Performance-based Navigation (PBN) Manual (Doc 9613).*

2.4. POWER SUPPLY FOR RADIO NAVIGATION AIDS AND COMMUNICATION SYSTEMS

2.4.1. Radio navigation aids and ground elements of communication systems of the types specified in AAR-AR shall be provided with suitable power supplies and means to ensure continuity of service consistent with the use of the service(s) involved.

Note: *Information material on power supply switch-over is contained in GM on the application of the standards and recommended practices for radio navigation aids.*

2.5. HUMAN FACTORS CONSIDERATIONS

2.5.1. Recommendation. — *Human Factors principles should be observed in the design and certification of radio navigation aids*.

Note: *Guidance material on Human Factors principles can be found in the Human Factors Training Manual (Doc 9683) and Circular 249 (Human Factors Digest No. 11 — Human Factors in CNS/ATM Systems).*

INTENTIONALLY LEFT BLANK

3. SPECIFICATIONS FOR RADIO NAVIGATION AIDS

Note: *Specification concerning the siting and construction of equipment and installations on operational areas aimed at reducing the hazard to aircraft to a minimum are contained in AAR-Aerodrome Standards.*

3.1. SPECIFICATION FOR ILS

3.1.1. DEFINITIONS

Angular displacement sensitivity. The ratio of measured DDM to the corresponding angular displacement from the appropriate reference line.

Back course sector. The course sector which is situated on the opposite side of the localizer from the runway.

Course line. The locus of points nearest to the runway centre line in any horizontal plane at which the DDM is zero.

Course sector. A sector in a horizontal plane containing the course line and limited by the loci of points nearest to the course line at which the DDM is 0.155.

DDM — Difference in depth of modulation. The percentage modulation depth of the larger signal minus the percentage modulation depth of the smaller signal, divided by 100.

Displacement sensitivity (localizer). The ratio of measured DDM to the corresponding lateral displacement from the appropriate reference line.

Facility Performance Category I — ILS. An ILS which provides guidance information from the coverage limit of the ILS to the point at which the localizer course line intersects the ILS glide path at a height of 30 m (100 ft) or less above the horizontal plane containing the threshold.

Note: *The lower limit is set to 30 m (100 ft) below the minimum Category I decision height (DH)*

Facility Performance Category II — ILS. An ILS which provides guidance information from the coverage limit of the ILS to the point at which the localizer course line intersects the ILS glide path at a height of 15 m (50 ft) or less above the horizontal plane containing the threshold.

Note: *The lower limit is set to 15 m (50 ft) below the minimum Category II decision height (DH).*

Facility Performance Category III — ILS. An ILS which, with the aid of ancillary equipment where necessary, provides guidance information from the coverage limit of the facility to, and along, the surface of the runway.

Front course sector. The course sector which is situated on the same side of the localizer as the runway.

Half course sector. The sector, in a horizontal plane containing the course line and limited by the loci of points nearest to the course line at which the DDM is 0.0775.

Half ILS glide path sector. The sector in the vertical plane containing the ILS glide path and limited by the loci of points nearest to the glide path at which the DDM is 0.0875.

ILS continuity of service. That quality which relates to the rarity of radiated signal interruptions. The level of continuity of service of the localizer or the glide path is expressed in terms of the probability of not losing the radiated guidance signals.

ILS glide path. That locus of points in the vertical plane containing the runway centre line at which the DDM is zero, which, of all such loci, is the closest to the horizontal plane.

ILS glide path angle. The angle between a straight line which represents the mean of the ILS glide path and the horizontal.

ILS glide path sector. The sector in the vertical plane containing the ILS glide path and limited by the loci of points nearest to the glide path at which the DDM is 0.175.

Note: *The ILS glide path sector is located in the vertical plane containing the runway centre line, and is divided by the radiated glide path in two parts called upper sector and lower sector, referring respectively to the sectors above and below the glide path.*

ILS integrity. That quality which relates to the trust which can be placed in the correctness of the information supplied by the facility. The level of integrity of the localizer or the glide path is expressed in terms of the probability of not radiating false guidance signals.

ILS Point "A". A point on the ILS glide path measured along the extended runway centre line in the approach direction a distance of 7.5 km (4 NM) from the threshold.

ILS Point "B". A point on the ILS glide path measured along the extended runway centre line in the approach direction a distance of 1 050 m (3 500 ft) from the threshold.

ILS Point "C". A point through which the downward extended straight portion of the nominal ILS glide path passes at a height of 30 m (100 ft) above the horizontal plane containing the threshold.

ILS Point "D". A point 4 m (12 ft) above the runway centre line and 900 m (3 000 ft) from the threshold in the direction of the localizer.

ILS Point "E". A point 4 m (12 ft) above the runway centre line and 600 m (2 000 ft) from the stop end of the runway in the direction of the threshold.

ILS reference datum (Point "T"). A point at a specified height located above the intersection of the runway centre line and the threshold and through which the downward extended straight portion of the ILS glide path passes.

Two-frequency glide path system. An ILS glide path in which coverage is achieved by the use of two independent radiation field patterns spaced on separate carrier frequencies within the particular glide path channel.

Two-frequency localizer system. A localizer system in which coverage is achieved by the use of two independent radiation field patterns spaced on separate carrier frequencies within the particular localizer VHF channel.

3.1.2. BASIC REQUIREMENTS

3.1.2.1. The ILS shall comprise the following basic components:

a) VHF localizer equipment, associated monitor system, remote control and indicator equipment;

b) UHF glide path equipment, associated monitor system, remote control and indicator equipment;

c) an appropriate means to enable glide path verification checks.

Note: *The Procedures for Air Navigation Services — Aircraft Operations (PANS-OPS) (Doc 8168) provide guidance on the conduct of glide path verification check.*

3.1.2.1.1. **Recommendation.—** *Distance to threshold information to enable glide path verification checks should be provided by either VHF marker beacons or distance measuring equipment (DME), together with associated monitor systems and remote control and indicator equipmen*t.

3.1.2.1.2. If one or more VHF marker beacons are used to provide distance to threshold information, the equipment shall conform to the specifications in 3.1.7. If DME is used in lieu of marker beacons, the equipment shall conform to the specifications in 3.1.7.6.5.

Note: *Information material relative to the use of DME and/or other standard radio navigation aids as an alternative to the marker beacon is contained in GM on the application of the SARPs for radio navigation aids, 2.11.*

3.1.2.1.3. Facility Performance Categories I, II and III — ILS shall provide indications at designated remote control points of the operational status of all ILS ground system components, as follows:

a) for all Facility Performance Category II and Category III ILS, the air traffic services unit involved in the control of aircraft on the final approach shall be one of the designated remote control points and shall receive information on the operational status of the ILS, with a delay commensurate with the requirements of the operational environment;

b) for a Facility Performance Category I ILS, if that ILS provides an essential radio navigation service, the air traffic services unit involved in the control of aircraft on the final approach shall be one of the designated remote control points and shall receive information on the operational status of the ILS, with a delay commensurate with the requirements of the operational environment.

Note*: The indications required by this Standard are intended as a tool to support air traffic management functions, and the applicable timeliness requirements are sized accordingly (consistently with 2.3.1).*

3.1.2.2. The ILS shall be constructed and adjusted so that, at a specified distance from the threshold, similar instrumental indications in the aircraft represent similar displacements from the course line or ILS glide path as appropriate, irrespective of the particular ground installation in use.

3.1.2.3. The localizer and glide path components specified in 3.1.2.1 a) and b) which form part of a Facility Performance Category I — ILS shall comply at least with the Standards in 3.1.3 and 3.1.5 respectively, excepting those in which application to Facility Performance Category II —ILS is prescribed.

3.1.2.4. The localizer and glide path components specified in 3.1.2.1 a) and b) above which form part of a Facility Performance Category II — ILS shall comply with the Standards applicable to these components in a Facility Performance Category I — ILS, as supplemented or amended by the Standards in 3.1.3 and 3.1.5 in which application to Facility Performance Category II — ILS is prescribed.

3.1.2.5. The localizer and glide path components and other ancillary equipment specified in 3.1.2.1.3, which form part of a Facility Performance Category III — ILS, shall otherwise comply with the Standards applicable to these components in Facility Performance Categories I and II — ILS, except as supplemented by the Standards in 3.1.3 and 3.1.5 in which application to Facility Performance Category III — ILS is prescribed.

3.1.2.6. To ensure an adequate level of safety, the ILS shall be so designed and maintained that the probability of operation within the performance requirements specified is of a high value, consistent with the category of operational performance concerned.

3.1.2.6.1. For Facility Performance Category II and III localizers and glide paths, the level of integrity and continuity of service shall be at least Level 3, as defined in 3.1.3.12.4 (localizer) and 3.1.5.8.4 (glide path).

Note: *The specifications for Facility Performance Categories II and III — ILS are intended to achieve the highest degree of system integrity, reliability and stability of operation under the most adverse environmental conditions to be encountered. Guidance material to achieve this objective is given in 2.8 of GM on the application of the SARPs for radio navigation aids.*

3.1.2.7. At those locations where two separate ILS facilities serve opposite ends of a single runway, and operationally harmful interference would be present if both facilities were transmitting, an interlock shall ensure that only the localizer serving the approach direction in use shall radiate.

Note 1: *While a low height overflight of a transmitting localizer may generate interference within airborne ILS receivers, this interference may only be considered as operationally harmful when it occurs in specific conditions, e.g. without visual cues of the runway, or when auto-coupled approaches and landings are conducted in visual conditions. Additional information material is contained in 2.1.8 and 2.13 of GM on the application of the SARPs for radio navigation aids.*

Note 2: *Interference may also be caused by transmissions from other localizers not serving the opposite end of the same runway (i.e. crossing, parallel or adjacent runways).*

Note 3: *An interlock can be provided through hardware, software or an equivalent procedural means.*

3.1.2.7.1. At locations where ILS facilities serving opposite ends of the same runway or different runways at the same airport use the same paired frequencies, an interlock shall ensure that only one facility shall radiate at a time. When switching from one ILS facility to another, radiation from both shall be suppressed for not less than 20 seconds.

Note: *If the localizer is radiating there is a possibility of interference to the GBAS VDB signals in the region where the aircraft overflies the localizer. A means to ensure that the localizer does not*

radiate can be provided through either hardware or software interlock or a procedural mitigation. Additional information material is contained in GM on the application of the SARPs for radio navigation aids.

3.1.2.7.2. At locations where ILS facilities serving opposite ends of the same runway or different runways at the same airport use the same paired frequencies, an interlock shall ensure that only one facility shall radiate at a time. When switching from one ILS facility to another, radiation from both shall be suppressed for not less than 20 seconds.

3.1.2.8. At those locations where an ILS facility and a GBAS facility serve opposite approach directions to the same runway, when the approach direction in use is not the direction served by the ILS, the localizer shall not radiate when GBAS low visibility operations that require GAST D are being conducted, except where it can be demonstrated that the localizer signal supports compliance with the requirements in Appendix , 3.6.8.2.2.5 and 3.6.8.2.2.6 defining the desired to undesired signal ratios and the maximum adjacent channel power tolerable by the GBAS VDB receiver.

Note: *If the localizer is radiating there is a possibility of interference to the GBAS VDB signals in the region where the aircraft overflies the localizer. A means to ensure that the localizer does not radiate can be provided through either hardware or software interlock or a procedural mitigation.*

3.1.3. VHF LOCALIZER AND ASSOCIATED MONITOR

Introduction. The specifications in this section cover ILS localizers providing either positive guidance information over 360 degrees of azimuth, or providing such guidance only within a specified portion of the front coverage (see 3.1.3.7.4). Where ILS localizers providing positive guidance information in a limited sector are installed, information from some suitably located navigation aid, together with appropriate procedures, will generally be required to ensure that any misleading guidance information outside the sector is not operationally significant.

3.1.3.1. General

3.1.3.1.1. The radiation from the localizer antenna system shall produce a composite field pattern which is amplitude modulated by a 90 Hz and a 150 Hz tone. The radiation field pattern shall produce a course sector with one tone predominating on one side of the course and with the other tone predominating on the opposite side.

3.1.3.1.2. When an observer faces the localizer from the approach end of a runway, the depth of modulation of the radio frequency carrier due to the 150 Hz tone shall predominate on the observer's right hand and that due to the 90 Hz tone shall predominate on the observer's left hand.

3.1.3.1.3. All horizontal angles employed in specifying the localizer field patterns shall originate from the centre of the localizer antenna system which provides the signals used in the front course sector.

3.1.3.2. Radio frequency

3.1.3.2.1. The localizer shall operate in the band 108 MHz to 111.975 MHz. Where a single radio frequency carrier is used, the frequency tolerance shall not exceed plus or minus 0.005 per cent. Where two radio frequency carriers are used, the frequency tolerance shall not exceed 0.002 per cent and the nominal band occupied by the carriers shall be symmetrical about the assigned frequency. With all tolerances applied, the frequency separation between the carriers shall not be less than 5 kHz nor more than 14 kHz.

3.1.3.2.2. The emission from the localizer shall be horizontally polarized. The vertically polarized component of the radiation on the course line shall not exceed that which corresponds to a DDM error of 0.016 when an aircraft is positioned on the course line and is in a roll attitude of 20 degrees from the horizontal.

3.1.3.2.2.1. For Facility Performance Category II localizers, the vertically polarized component of the radiation on the course line shall not exceed that which corresponds to a DDM error of 0.008 when an aircraft is positioned on the course line and is in a roll attitude of 20 degrees from the horizontal.

3.1.3.2.2.2. For Facility Performance Category III localizers, the vertically polarized component of the radiation within a sector bounded by 0.02 DDM either side of the course line shall not exceed that which corresponds to a DDM error of 0.005 when an aircraft is in a roll attitude of 20 degrees from the horizontal.

3.1.3.2.3. For Facility Performance Category III localizers, signals emanating from the transmitter shall contain no components which result in an apparent course line fluctuation of more than 0.005 DDM peak to peak in the frequency band 0.01 Hz to 10 Hz.

3.1.3.3. Coverage

Note: *Information material on localizer coverage is given in GM on the application of the SARPs for radio navigation aids, 2.1.10 and Figures 7A, 7B, 8A and 8B.*

3.1.3.3.1. The localizer shall provide signals sufficient to allow satisfactory operation of a typical aircraft installation within the localizer and glide path coverage sectors. The localizer coverage sector shall extend from the centre of the localizer antenna system to distances of:

- 46.3 km (25 NM) within plus or minus 10 degrees from the front course line;
- 31.5 km (17 NM) between 10 degrees and 35 degrees from the front course line;
- 18.5 km (10 NM) outside of plus or minus 35 degrees from the front course line if coverage is provided;

except that, where topographical features dictate or operational requirements permit, the limits may be reduced down to 33.3 km (18 NM) within the plus or minus 10-degree sector and 18.5 km (10 NM) within the remainder of the coverage when alternative navigational

means provide satisfactory coverage within the intermediate approach area. The localizer signals shall be receivable at the distances specified at and above a height of 600 m (2 000 ft) above the elevation of the threshold, or 300 m (1 000 ft) above the elevation of the highest point within the intermediate and final approach areas, whichever is the higher, except that, where needed to protect ILS performance and if operational requirements permit, the lower limit of coverage at angles beyond 15 degrees from the front course line shall be raised linearly from its height at 15 degrees to as high as 1 350 m (4 500 ft) above the elevation of the threshold at 35 degrees from the front course line. Such signals shall be receivable, to the distances specified, up to a surface extending outward from the localizer antenna and inclined at 7 degrees above the horizontal.

Note: *Where intervening obstacles penetrate the lower surface, it is intended that guidance need not be provided at less than line-of-sight heights.*

3.1.3.3.2. In all parts of the coverage volume specified in 3.1.3.3.1, other than as specified in 3.1.3.3.2.1, 3.1.3.3.2.2 and 3.1.3.3.2.3, the field strength shall be not less than 40 microvolts per metre (minus 114 dBW/m^2).

Note: *This minimum field strength is required to permit satisfactory operational usage of ILS localizer facilities.*

3.1.3.3.2.1 For Facility Performance Category I localizers, the minimum field strength on the ILS gate path and within the localizer course sector from a distance of 18.5 km (10 NM) to a height of 30 m (100 ft) above the horizontal plane containing the threshold shall be not less than 90 microvolts per metre (minus 107 dBW/m^2).

3.1.3.3.2.2 For Facility Performance Category II localizers, the minimum field strength on the ILS glide path and within the localizer course sector shall be not less than 100 microvolts per metre (minus 106 dBW/m^2) at a distance of 18.5 km (10 NM) increasing to not less than 200 microvolts per metre (minus 100dBW/m^2) at a height of 15 m (50 ft) above the horizontal plane containing the threshold.

3.1.3.3.2.3 For Facility Performance Category III localizers, the minimum field strength on the ILS glide path and within the localizer course sector shall be not less than 100 microvolts per metre (minus 106 dBW/m^2) at a distance of 18.5 km (10 NM), increasing to not less than 200 microvolts per metre (minus 100 dBW/m^2) at 6 m (20 ft) above the horizontal plane containing the threshold. From this point to a further point 4 m (12 ft) above the runway centre line, and 300 m (1 000 ft) from the threshold in the direction of the localizer, and thereafter at a height of 4 m (12 ft) along the length of the runway in the direction of the localizer, the field strength shall be not less than 100 microvolts per metre (minus 106 dBW/m^2).

Note: *The field strengths given in 3.1.3.3.2.2 and 3.1.3.3.2.3 are necessary to provide the signal-to-noise ratio required for improved integrity.*

3.1.3.3.3 **Recommendation.—** *Above 7 degrees, the signals should be reduced to as low a value as practicable*.

Note 1: *The requirements in 3.1.3.3.1, 3.1.3.3.2.1, 3.1.3.3.2.2 and 3.1.3.3.2.3 are based on the assumption that the aircraft is heading directly toward the facility.*

Note 2: *Information on significant airborne receiver parameters is given in 2.2.2 and 2.2.4 of GM on the application of the SARPs for radio navigation aids.*

3.1.3.3.4 When coverage is achieved by a localizer using two radio frequency carriers, one carrier providing a radiation field pattern in the front course sector and the other providing a radiation field pattern outside that sector, the ratio of the two carrier signal strengths in space within the front course sector to the coverage limits specified at 3.1.3.3.1 above shall not be less than 10 dB.

Note: *Information on localizers achieving coverage with two radio frequency carriers is given in the Note to 3.1.3.11.2 and in 2.7 of GM on the application of the SARPs for radio navigation aids.*

3.1.3.3.5 **Recommendation. —** *For Facility Performance Category III localizers, the ratio of the two carrier signal strengths in space within the front course sector should not be less than 16 dB*.

3.1.3.4. Course structure

3.1.3.4.1 For Facility Performance Category I localizers, bends in the course line shall not have amplitudes which exceed the following:

Zone	Amplitude (DDM) (95% probability)
Outer limit of coverage to ILS Point “A”	0.031
ILS Point “A” to ILS Point “B”	0.031 at ILS Point “A” decreasing at a linear rate to 0.015 at ILS Point “B”
ILS Point “B” to ILS Point “C”	0.015

3.1.3.4.1. For Facility Performance Categories II and III localizers, bends in the course line shall not have amplitudes which exceed the following:

Zone	Amplitude (DDM) (95% probability)
Outer limit of coverage to ILS Point “A”	0.031
ILS Point “A” to ILS Point “B”	0.031 at ILS Point “A” decreasing at a linear rate to 0.005 at ILS Point “B”
ILS Point “B” to	ILS reference datum
ILS reference datum	0.005

and, for Facility Performance Category III only:

ILS reference datum to ILS Point “D”	0.005
ILS Point “D” to ILS Point “E”	0.005 at ILS Point “D” increasing at a linear rate to 0.010 at ILS Point “E”

Note 1: *The amplitudes referred to in 3.1.3.4.1 and 43.1.3.4.2 are the DDMs due to bends as realized on the mean course line, when correctly adjusted.*

Note 2: *Information relevant to the localizer course structure is given in 32.1.4, 2.1.6 and 2.1.7 of on the application of the SARPs for radio navigation aids.*

3.1.3.5. Carrier modulation

3.1.3.5.1 The nominal depth of modulation of the radio frequency carrier due to each of the 90 Hz and 150 Hz tones shall be 20 per cent along the course line.

3.1.3.5.2 The depth of modulation of the radio frequency carrier due to each of the 90 Hz and 150 Hz tones shall be within the limits of 18 and 22 per cent.

3.1.3.5.3 The following tolerances shall be applied to the frequencies of the modulating tones:

a) the modulating tones shall be 90 Hz and 150 Hz within plus or minus 2.5 per cent;

b) the modulating tones shall be 90 Hz and 150 Hz within plus or minus 1.5 per cent for Facility Performance Category II installations;

c) the modulating tones shall be 90 Hz and 150 Hz within plus or minus 1 per cent for Facility Performance Category III installations;

d) the total harmonic content of the 90 Hz tone shall not exceed 10 per cent; additionally, for Facility Performance Category III localizers, the second harmonic of the 90 Hz tone shall not exceed 5 per cent;

e) the total harmonic content of the 150 Hz tone shall not exceed 10 per cent.

3.1.3.5.3.1 **Recommendation. —** *For Facility Performance Category I — ILS, the modulating tones should be 90 Hz and 150 Hz within plus or minus 1.5 per cent where practicable.*

3.1.3.5.3.2 For Facility Performance Category III localizers, the depth of amplitude modulation of the radio frequency carrier at the power supply frequency or its harmonics, or by other unwanted components, shall not exceed 0.5 per cent. Harmonics of the supply, or other unwanted noise components that may intermodulate with the 90 Hz and 150Hz navigation tones or their harmonics to produce fluctuations in the course line, shall not exceed 0.05 per cent modulation depth of the radio frequency carrier.

3.1.3.5.3.3 The modulation tones shall be phase-locked so that within the half course sector, the demodulated 90 Hz and 150 Hz wave forms pass through zero in the same direction within:

a) for Facility Performance Categories I and II localizers: 20 degrees; and

b) for Facility Performance Category III localizers: 10 degrees, of phase relative to the 150 Hz component, every half cycle of the combined 90 Hz and 150 Hz wave form.

Note 1: *The definition of phase relationship in this manner is not intended to imply a requirement to measure the phase within the half course sector.*

Note 2: *Information relative to such measurement is given at Figure 6 of (GM on the application of the SARPs for radio navigation aids.*

3.1.3.5.3.4 With two-frequency localizer systems, 3.1.3.5.3.3 shall apply to each carrier. In addition, the 90 Hz modulating tone of one carrier shall be phase-locked to the 90 Hz modulating tone of the other carrier so that the demodulated wave forms pass through zero in the same direction within:

a) for Facility Performance Categories I and II localizers: 20 degrees; and

b) for Facility Performance Category III localizers: 10 degrees, of phase relative to 90 Hz. Similarly, the 150 Hz tones of the two carriers shall be phase-locked so that the demodulated wave forms pass through zero in the same direction within:

1) for Facility Performance Categories I and II localizers: 20 degrees; and

2) for Facility Performance Category III localizers: 10 degrees, of phase relative to 150 Hz.

3.1.3.5.3.5 Alternative two-frequency localizer systems that employ audio phasing different from the normal in-phase conditions described in 3.1.3.5.3.4 shall be permitted. In this alternative system, the 90 Hz to 90 Hz phasing and the 150 Hz to 150 Hz phasing shall be adjusted to their nominal values to within limits equivalent to those stated in 3.1.3.5.3.4.

Note: *This is to ensure correct airborne receiver operation in the region away from the course line where the two carrier signal strengths are approximately equal.*

3.1.3.5.3.6 **Recommendation.—** *The sum of the modulation depths of the radio frequency carrier due to the 90 Hz and 150 Hz tones should not exceed 60 per cent or be less than 30 per cent within the required coverage*.

3.1.3.5.3.6.1 For equipment first installed after 1 January 2000, the sum of the modulation depths of the radio frequency carrier due to the 90 Hz and 150 Hz tones shall not exceed 60 per cent or be less than 30 per cent within the required coverage.

Note 1: *If the sum of the modulation depths is greater than 60 per cent for Facility Performance Category I localizers, the nominal displacement sensitivity may be adjusted as provided for in 3.1.3.7.1 to achieve the above modulation limit.*

Note 2: *For two-frequency systems, the standard for maximum sum of modulation depths does not apply at or near azimuths where the course and clearance carrier signal levels are equal in amplitude (i.e. at azimuths where both transmitting systems have a significant contribution to the total modulation depth).*

Note 3: *The standard for minimum sum of modulation depths is based on the malfunctioning alarm level being set as high as 30 per cent as stated in 2.3.3 of GM on the application of the SARPs for radio navigation aids.*

3.1.3.5.3.7 When utilizing a localizer for radiotelephone communications, the sum of the modulation depths of the radio frequency carrier due to the 90 Hz and 150 Hz tones shall not exceed 65 per cent within 10 degrees of the course line and shall not exceed 78 per cent at any other point around the localizer.

3.1.3.5.4 **Recommendation. —** *Undesired frequency and phase modulation on ILS localizer radio frequency carriers that can affect the displayed DDM values in localizer receivers should be minimized to the extent practical*.

Note: *Relevant guidance material is given in 2.15 of GM on the application of the SARPs for radio navigation aids.Course alignment accuracy*

3.1.3.5.5 The mean course line shall be adjusted and maintained within limits equivalent to the following displacements from the runway centre line at the ILS reference datum:

a) for Facility Performance Category I localizers: plus, or minus 10.5 m (35 ft), or the linear equivalent of 0.015 DDM, whichever is less;

b) for Facility Performance Category II localizers: plus, or minus 7.5 m (25 ft);

c)for Facility Performance Category III localizers: plus, or minus 3 m (10 ft).

3.1.3.5.6 **Recommendation. —** *For Facility Performance Category II localizers, the mean course line should be adjusted and maintained within limits equivalent to plus or minus 4.5 m (15 ft) displacement from runway centre line at the ILS reference datum*.

Note 1: *It is intended that Facility Performance Categories II and III installations be adjusted and maintained so that the limits specified in 3.1.3.6.1 and 3.1.3.6.2 are reached on very rare occasions. It is further intended that design and operation of the total ILS ground system be of sufficient integrity to accomplish this aim.*

Note 2: *It is intended that new Facility Performance Category II installations are to meet the requirements of 3.1.3.6.2.*

Note 3: *Measurement of localizer course alignment is given in 2.1.3 of GM on the application of the SARPs for radio navigation aids.*

3.1.3.6. Course alignment accuracy

3.1.3.6.1. The mean course line shall be adjusted and maintained within limits equivalent to the following displacements from the runway centre line at the ILS reference datum:

a) for Facility Performance Category I localizers: plus or minus 10.5 m (35 ft), or the linear equivalent of 0.015 DDM, whichever is less;

b) for Facility Performance Category II localizers: plus or minus 7.5 m (25 ft);

c) for Facility Performance Category III localizers: plus or minus 3 m (10 ft).

3.1.3.6.2. **Recommendation.—** *For Facility Performance Category II localizers, the mean course line should be adjusted and maintained within limits equivalent to plus or minus 4.5 m (15 ft) displacement from runway centre line at the ILS reference datum.*

Note 1: *It is intended that Facility Performance Categories II and III installations be adjusted and maintained so that the limits specified in 3.1.3.6.1 and 3.1.3.6.2 are reached on very rare occasions. It is further intended that design and operation of the total ILS ground system be of sufficient integrity to accomplish this aim.*

Note 2: *It is intended that new Facility Performance Category II installations are to meet the requirements of 3.1.3.6.2.*

Note 3: *Information on measurement of localizer course alignment is given in GM on application of the SARPs for radio navigation aids, p.2.1.9.*

3.1.3.7. Displacement sensitivity

3.1.3.7.1. The nominal displacement sensitivity within the half course sector shall be the equivalent of 0.00145 DDM/m (0.00044 DDM/ft) at the ILS reference datum except that for Category I localizers, where the specified nominal displacement sensitivity cannot be met, the displacement sensitivity shall be adjusted as near as possible to that value. For Facility Performance Category I localizers on runway codes 1 and 2, the nominal displacement sensitivity shall be achieved at the ILS Point “B”. The maximum course sector angle shall not exceed six degrees.

Note: *Runway codes 1 and 2 are defined in AAR-Airdrome Standards.*

3.1.3.7.2. The lateral displacement sensitivity shall be adjusted and maintained within the limits of plus or minus:

a) 17 per cent of the nominal value for Facility Performance Categories I and II;

b) 10 per cent of the nominal value for Facility Performance Category III.

3.1.3.7.3. **Recommendation.—** *For Facility Performance Category II — ILS, displacement sensitivity should be adjusted and maintained within the limits of plus or minus 10 per cent where practicable*.

Note 1: *The figures given in 3.1.3.7.1, 3.1.3.7.2 and 3.1.3.7.3 are based upon a nominal sector width of 210 m (700 ft) at the appropriate point, i.e. ILS Point “B” on runway codes 1 and 2, and the ILS reference datum on other runways.*

Note 2: *Information on the alignment and displacement sensitivity of localizers using two radio frequency carriers is given in GM.*

Note 3: *Information on measurement of localizer displacement sensitivity is given in GM.*

3.1.3.7.4. The increase of DDM shall be substantially linear with respect to angular displacement from the front courseline (where DDM is zero) up to an angle on either side of the front course line where the DDM is 0.180. From that angle to plus or minus 10 degrees, the DDM shall not be less than 0.180. From plus or minus 10 degrees to plus or minus 35 degrees, the DDM shall not be less than 0.155. Where coverage is required outside of the plus or minus 35 degrees sector, the DDM in the area of the coverage, except in the back course sector, shall not be less than 0.155.

Note 1: *The linearity of change of DDM with respect to angular displacement is particularly important in the neighbourhood of the course line.*

Note 2: *The above DDM in the 10-35 degree sector is to be considered a minimum requirement for the use of ILS as a landing aid. Wherever practicable, a higher DDM, e.g. 0.180, is advantageous to assist high speed aircraft to execute large angle intercepts at operationally desirable distances provided that limits on modulation percentage given in 3.1.3.5.3.6 are met.*

Note 3: *Wherever practicable, the localizer capture level of automatic flight control systems is to be set at or below 0.175 DDM in order to prevent false localizer captures.*

3.1.3.8. Voice

3.1.3.8.1. Facility Performance Categories I and II localizers may provide a ground-to-air radiotelephone communication channel to be operated simultaneously with the navigation and identification signals, provided that such operation shall not interfere in any way with the basic localizer function.

3.1.3.8.2. Facility Performance Category III localizers shall not provide such a channel, except where extreme care has been taken in the design and operation of the facility to ensure that there is no possibility of interference with the navigational guidance.

3.1.3.8.3. If the channel is provided, it shall conform with the following Standards:

3.1.3.8.3.1 The channel shall be on the same radio frequency carrier or carriers as used for the localizer function, and the radiation shall be horizontally polarized. Where two carriers are modulated with speech, the relative phases of the modulations on the two carriers shall be such as to avoid the occurrence of nulls within the coverage of the localizer.

3.1.3.8.3.2 The peak modulation depth of the carrier or carriers due to the radiotelephone communications shall not exceed 50 per cent but shall be adjusted so that:

a) the ratio of peak modulation depth due to the radiotelephone communications to that due to the identification signal is approximately 9:1;

c) the sum of modulation components due to use of the radiotelephone channel, navigation signals and identification signals shall not exceed 95 per cent.

3.1.3.8.3.3 The audio frequency characteristics of the radiotelephone channel shall be flat to within 3 dB relative to the level at 1 000 Hz over the range 300 Hz to 3 000 Hz.

3.1.3.9. Identification

3.1.3.9.1. The localizer shall provide for the simultaneous transmission of an identification signal, specific to the runway and approach direction, on the same radio frequency carrier or carriers as used for the localizer function. The transmission of the identification signal shall not interfere in any way with the basic localizer function.

3.1.3.9.2. The identification signal shall be produced by Class A2A modulation of the radio frequency carrier or carriers using a modulation tone of 1 020 Hz within plus or minus 50 Hz. The depth of modulation shall be between the limits of 5 and 15 per cent except that, where a radiotelephone communication channel is provided, the depth of modulation shall be adjusted so that the ratio of peak modulation depth due to radiotelephone communications to that due to the identification signal modulation is approximately 9:1 (see 3.1.3.8.3.2). The emissions carrying the identification signal shall be horizontally polarized. Where two carriers are modulated with identification signals, the relative phase of the modulations shall be such as to avoid the occurrence of nulls within the coverage of the localizer.

3.1.3.9.3. The identification signal shall employ the International Morse Code and consist of two or three letters. It may be preceded by the International Morse Code signal of the letter “I”, followed by a short pause where it is necessary to distinguish the ILS facility from other navigational facilities in the immediate area.

3.1.3.9.4. The identification signal shall be transmitted by dots and dashes at a speed corresponding to approximately seven words per minute, and shall be repeated at approximately equal intervals, not less than six times per minute, at all times during which the localizer is available for operational use. When the transmissions of the localizer are not available for operational use, as, for example, after removal of navigation components, or during maintenance or test transmissions, the identification signal shall be suppressed. The dots shall have a duration of 0.1 second to 0.160 second. The dash duration shall be typically three times the duration of a dot. The interval between dots and/or dashes shall be equal to that of one dotplus or minus 10 per cent. The interval between letters shall not be less than the duration of three dots.

3.1.3.10. Siting

Note: *information relevant to siting localizer antennas in the runway and taxiway environment is given in GM,p. 2.1.9*

3.1.3.10.1. For Facility Performance Categories II and III, the localizer antenna system shall be located on the extension on the centre line of the runway at the stop end, and the equipment shall be adjusted so that the course lines will be in a vertical plane containing the centre line of the runway served. The antenna height and location shall be consistent with safe obstruction clearance practices.

3.1.3.10.2. For Facility Performance Category I, the localizer antenna system shall be located and adjusted as in 3.1.3.10.1, unless site constraints dictate that the antenna be offset from the centre line of the runway.

3.1.3.10.2.1 The offset localizer system shall be located and adjusted in accordance with the offset ILS provisions of the Procedures for *Air Navigation Services — Aircraft Operations* (*PANS-OPS) (Doc 8168)*, Volume II, and the localizer standards shall be referenced to the associated fictitious threshold point.

3.1.3.11. Monitoring

3.1.3.11.1. The automatic monitor system shall provide a warning to the designated control points and cause one of the following to occur, within the period specified in 3.1.3.11.3.1, if any of the conditions stated in 3.1.3.11.2 persist:

a) radiation to cease; and

b) removal of the navigation and identification components from the carrier.

3.1.3.11.2. The conditions requiring initiation of monitor action shall be the following:

a) for Facility Performance Category I localizers, a shift of the mean course line from the runway centre line equivalent to more than 10.5 m (35 ft), or the linear equivalent to 0.015 DDM, whichever is less, at the ILS reference datum;

b) for Facility Performance Category II localizers, a shift of the mean course line from the runway centre line equivalent to more than 7.5 m (25 ft) at the ILS reference datum;

c) for Facility Performance Category III localizers, a shift of the mean course line from the runway centre line equivalent to more than 6 m (20 ft) at the ILS reference datum;

d) in the case of localizers in which the basic functions are provided by the use of a single-frequency system, a reduction of power output to a level such that any of the requirements of 3.1.3.3, 3.1.3.4 or 3.1.3.5 are no longer satisfied, or to a level that is less than 50 per cent of the normal level (whichever occurs first);

e) in the case of localizers in which the basic functions are provided by the use of a two-frequency system, a reductioof power output for either carrier to less than 80 per cent of normal, except that a greater reduction to between 80 per cent and 50 per cent of normal may be permitted, provided the localizer continues to meet the requirements of 3.1.3.3, 3.1.3.4 and 3.1.3.5;

Note: *It is important to recognize that a frequency change resulting in a loss of the frequency difference specified in 3.1.3.2.1 may produce a hazardous condition. This problem is of greater operational significance for Facility Performance Categories II and III installations. As necessary, this problem can be dealt with through special monitoring provisions or highly reliable circuitry.*

f) change of displacement sensitivity to a value differing by more than 17 per cent from the nominal value for the localizer facility.

Note: *In selecting the power reduction figure to be employed in monitoring referred to in 3.1.3.11.2 e), particular attention is directed to vertical and horizontal lobe structure (vertical lobing due to different antenna heights) of the combined radiation systems when two carriers are employed. Large changes in the power ratio between carriers may result in low clearance areas and false courses in the off-course areas to the limits of the vertical coverage requirements specified in 3.1.3.3.1.*

3.1.3.11.2.1 **Recommendation.—** *In the case of localizers in which the basic functions are provided by the use of a two-frequency system, the conditions requiring initiation of monitor action should include the case when the DDM in the required coverage beyond plus or minus 10 degrees from the front course line, except in the back course sector, decreases below 0.155*.

3.1.3.11.3. The total period of radiation, including period(s) of zero radiation, outside the performance limits specified in a), b), c), d), e) and f) of 3.1.3.11.2 shall be as short as practicable, consistent with the need for avoiding interruptions of the navigation service provided by the localizer.

3.1.3.11.3.1 The total period referred to under 3.1.3.11.3 shall not exceed under any circumstances:

- 10 seconds for Facility Performance Category I localizers;
- 5 seconds for Facility Performance Category II localizers;
- 2 seconds for Facility Performance Category III localizers.

Note 1: *The total time periods specified are never-to-be-exceeded limits and are intended to protect aircraft in the final stages of approach against prolonged or repeated periods of localizer guidance outside the monitor limits. For this reason, they include not only the initial period of outside tolerance operation but also the total of any or all periods of outside tolerance radiation including period(s) of zero radiation and time required to remove the navigation and identification components from the carrier, which might occur during action to restore service, for example, in the course of consecutive monitor functioning and consequent changeover(s) to localizer equipment or elements thereof.*

Note 2: *From an operational point of view, the intention is that no guidance outside the monitor limits be radiated after the time periods given, and that no further attempts be made to restore service until a period in the order of 20 seconds has elapsed.*

3.1.3.11.3.2 **Recommendation.—** *Where practicable, the total period under 3.1.3.11.3.1 should be reduced so as not to exceed two seconds for Facility Performance Category II localizers and one second for Facility Performance Category III localizers.*

3.1.3.11.4. Design and operation of the monitor system shall be consistent with the requirement that navigation guidance and identification will be removed and a warning provided at the designated remote control points in the event of failure of the monitor system itself.

Note: *information on the design and operation of monitor systems is given in GM, 2.1.7.*

3.1.3.12. Integrity and continuity of service levels and requirements

3.1.3.12.1. Localizer shall be assigned a level of integrity and continuity of service as given in 3.1.3.12.2 to 3.1.3.12.5.

Note: *Levels are used to provide the necessary information for the determination of the category of operation and associated minima, which are a function of the Facility Performance Category, the (separate) integrity and continuity of service level, and a number of operational factors (e.g. aircraft and crew qualification, meteorological conditions, and runway features). If a localizer does not meet its required integrity and continuity of service level, some operational use may still be possible, as stated in the Manual of All-Weather Operations (Doc 9365), GM on ILS facility classification and downgrading. Similarly, if a localizer exceeds the minimum integrity and continuity of service level, more demanding operations may be possible*

3.1.3.12.2. The localizer level shall be Level 1 if either:

1) the localizer's integrity of service or its continuity of service, or both, are not demonstrated; or

2) the localizer's integrity of service and its continuity of service are both demonstrated, but at least one of them does not meet the requirements of Level 2.

3.1.3.12.2.1 **Recommendation.—** *The probability of not radiating false guidance signals should not be less than* $1 - 1.0 \times 10^{-7}$ *in any one landing for level 1 localizer.*

3.1.3.12.2.2 **Recommendation.—** *The probability of not losing the radiated guidance signal should exceed* $1 - 4 \times 10^{-6}$ *in any period of 15 seconds for level 1 localizers (equivalent to 1 000 hours mean time between outages).*

Note: *A localizer that meets both Recommended Practices 3.1.3.12.2.1 and 3.1.3.12.2.2 also meets Standard 3.1.3.12.3 (Level 2 performance) and is therefore to be identified as Level 2.*

3.1.3.12.2.3 **Recommendation.—** *In the event that the integrity value for a Level 1 localizer is not available or cannot be readily calculated, a detailed analysis should be performed to assure proper monitor fail-safe operation.*

3.1.3.12.3. The localizer level shall be Level 2 if:

— the probability of not radiating false guidance signals is not less than $1 - 1.0 \times 10^{-7}$ in any one landing; and

— the probability of not losing the radiated guidance is greater than $1 - 4 \times 10^{-6}$ in any period of 15 seconds (equivalent to 1 000 hours mean time between outages).

3.1.3.12.4. The localizer level shall be Level 3 if:

— the probability of not radiating false guidance signals is not less than $1 - 0.5 \times 10^{-9}$ in any one landing; and

— the probability of not losing the radiated guidance is greater than $1 - 2 \times 10^{-6}$ in any period of 15 seconds (equivalent to 2 000 hours mean time between outages).

3.1.3.12.5. The localizer level shall be Level 4 if:

— the probability of not radiating false guidance signals is not less than $1 – 0.5 \times 10^{-9}$ in any one landing; and

— the probability of not losing the radiated guidance is greater than $1 – 2 \times 10^{-6}$ in any period of 30 seconds (equivalent to 4 000 hours mean time between outages).

3.1.4. INTERFERENCE IMMUNITY PERFORMANCE FOR ILS LOCALIZER RECEIVING SYSTEMS

3.1.4.1. The ILS localizer receiving system shall provide adequate immunity to interference from two-signal, third-order intermodulation products caused by VHF FM broadcast signals having levels in accordance with the following:

$$2N_1 + N_2 + 72 \leq 0$$

for VHF FM sound broadcasting signals in the range 107.7 – 108.0 MHz

and

$$2N_1 + N_2 + 3\left(24 - 20\log\frac{\Delta f}{0{,}4}\right) \leq 0$$

for VHF FM sound broadcasting signals below 107.7 MHz,

where the frequencies of the two VHF FM sound broadcasting signals produce, within the receiver, a two-signal, third-order intermodulation product on the desired ILS localizer frequency.

N_1 and N_2 are the levels (dBm) of the two VHF FM sound broadcasting signals at the ILS localizer receiver input. Neither level shall exceed the desensitization criteria set forth in 3.1.4.2.

$\Delta f = 108.1 – f_1$, where f_1 is the frequency of N_1, the VHF FM sound broadcasting signal closer to 108.1 MHz.

3.1.4.2. The ILS localizer receiving system shall not be desensitized in the presence of VHF FM broadcast signals having levels in accordance with the following table:

Frequency (MHz)	Maximum level of unwanted signal at receiver input (dBm)
88-102	+15
104	+10
106	+5
107.9	–10

Note 1: *The relationship is linear between adjacent points designated by the above frequencies.*

Note 2: *Guidance material on immunity criteria to be used for the performance quoted in 3.1.4.1 and 3.1.4.2 is contained in GM on the application of the SARPs for radio navigation aids, 2.2.2.*

3.1.5. UHF GLIDE PATH EQUIPMENT AND ASSOCIATED MONITOR

Note: *θ is used in this paragraph to denote the nominal glide path angle.*

3.1.5.1. General

3.1.5.1.1. The radiation from the UHF glide path antenna system shall produce a composite field pattern which is amplitude modulated by a 90 Hz and a 150 Hz tone. The pattern shall be arranged to provide a straight line descent path in the vertical plane containing the centre line of the runway, with the 150 Hz tone predominating below the path and the 90 Hz tone predominating above the path to at least an angle equal to 1.75 θ.

3.1.5.1.2. **Recommendation**.— *The ILS glide path angle should be 3 degrees. ILS glide path angles in excess of 3 degrees should not be used except where alternative means of satisfying obstruction clearance requirements are impracticable*.

3.1.5.1.2.1. The glide path angle shall be adjusted and maintained within:

a) 0.075 θ from θ for Facility Performance Categories I and II — ILS glide paths;

b) 0.04 θ from θ for Facility Performance Category III — ILS glide paths.

Note 1: *Guidance material on adjustment and maintenance of glide path angles is given in GM on the application of the SARPs for radio navigation aids,p.2.4.*

Note 2: *Guidance material on ILS glide path curvature, alignment and siting, relevant to the selection of the height of the ILS reference datum is given in GM on the application of the for radio navigation aids,p.2.4.*

3.1.5.1.3. The downward extended straight portion of the ILS glide path shall pass through the ILS reference datum at a height ensuring safe guidance over obstructions and also safe and efficient use of the runway served.

3.1.5.1.4. The height of the ILS reference datum for Facility Performance Categories II and III — ILS shall be 15 m (50 ft). A tolerance of plus 3 m (10 ft) is permitted.

3.1.5.1.5. **Recommendation. —** *The height of the ILS reference datum for Facility Performance Category I — ILS should be 15 m (50 ft). A tolerance of plus 3 m (10 ft) is permitted*.

Note 1: *In arriving at the above height values for the ILS reference datum, a maximum vertical distance of 5.8 m (19 ft) between the path of the aircraft glide path antenna and the path of the lowest part of the wheels at the threshold was assumed. For aircraft exceeding this criterion, appropriate steps may have to be taken either to maintain adequate clearance at threshold or to adjust the permitted operating minima.*

Note 2: *Appropriate guidance material is given in GM on the application of the SARPs for radio navigation aids,p.2.4.*

3.1.5.1.6. **Recommendation. —** *The height of the ILS reference datum for Facility Performance Category I — ILS used on short precision*

approach runway codes 1 and 2 should be 12 m (40 ft). A tolerance of plus 6 m (20 ft) is permitted.

3.1.5.2. Radio frequency

3.1.5.2.1. The glide path equipment shall operate in the band 328.6 MHz to 335.4 MHz. Where a single radio frequency carrier is used, the frequency tolerance shall not exceed 0.005 per cent. Where two carrier glide path systems are used, the frequency tolerance shall not exceed 0.002 per cent and the nominal band occupied by the carriers shall be symmetrical about the assigned frequency. With all tolerances applied, the frequency separation between the carriers shall not be less than 4 kHz nor more than 32 kHz.

3.1.5.2.2. The emission from the glide path equipment shall be horizontally polarized.

3.1.5.2.3. For Facility Performance Category III — ILS glide path equipment, signals emanating from the transmitter shall contain no components which result in apparent glide path fluctuations of more than 0.02 DDM peak to peak in the frequency band 0.01 Hz to 10 Hz.

3.1.5.3. Coverage

3.1.5.3.1. The glide path equipment shall provide signals sufficient to allow satisfactory operation of a typical aircraft installation in sectors of 8 degrees in azimuth on each side of the centre line of the ILS glide path, to a distance of at least 18.5 km (10 NM) up to 1.75 θ and down to 0.45 θ above the horizontal or to such lower angle, down to 0.30 θ, as required to safeguard the promulgated glide path intercept procedure.

3.1.5.3.2. In order to provide the coverage for glide path performance specified in 3.1.5.3.1, the minimum field strength within this coverage sector shall be 400 microvolts per metre (minus 95 dBW/m^2). For Facility Performance Category I glide paths, this field strength shall be provided down to a height of 30 m (100 ft) above the horizontal plane containing the threshold. For Facility Performance Categories II and III glide paths, this field strength shall be provided down to a height of 15 m (50 ft) above the horizontal plane containing the threshold.

Note 1: *The requirements in the foregoing paragraphs are based on the assumption that the aircraft is heading directly toward the facility.*

Note 2: *Information on significant airborne receiver parameters is given in GM on the application of the SARPs for radio navigation aids, p.2.4.*

Note 3: *Material concerning reduction in coverage outside 8 degrees on each side of the centre line of the ILS glide path appears in GM on the application of the SARPs for radio navigation aids,p.2.4.*

3.1.5.4. ILS glide path structure

3.1.5.4.1. For Facility Performance Category I — ILS glide paths, bends in the glide path shall not have amplitudes which exceed the following:

Zone	Amplitude (DDM_ (95% probability)
Outer limit of coverage to ILS Point “C”	0.035

3.1.5.4.2. For Facility Performance Categories II and III — ILS glide paths, bends in the glide path shall not have amplitudes which exceed the following:

Zone	Amplitude (DDM_ (95% probability)
Outer limit of coverage to ILS Point “A”	0.035
ILS Point “A” to ILS Point “B”	0.035 at :ILS Point “A” decreasing at a linear rate to 0.023 at ILS Point “B”
ILS Point “B” to the ILS reference datum	0.023

Note 1: *The amplitudes referred to in 3.1.5.4.1 and 3.1.5.4.2 are the DDMs due to bends as realized on the mean ILS glide path correctly adjusted.*

Note 2: *In regions of the approach where ILS glide path curvature is significant, bend amplitudes are calculated from the mean curved path, and not the downward extended straight line.*

Note 3: *Material relevant to the ILS glide path course structure is given in GM on the application of the SARPs for radio navigation aids, p.2.1.4.*

3.1.5.5. Carrier modulation

3.1.5.5.1. The nominal depth of modulation of the radio frequency carrier due to each of the 90 Hz and 150 Hz tones shall be 40 per cent along the ILS glide path. The depth of modulation shall not deviate outside the limits of 37.5 per cent to 42.5 per cent.

3.1.5.5.2. The following tolerances shall be applied to the frequencies of the modulating tones:

a) the modulating tones shall be 90 Hz and 150 Hz within 2.5 per cent for Facility Performance Category I — ILS;

b) the modulating tones shall be 90 Hz and 150 Hz within 1.5 per cent for Facility Performance Category II — ILS;

c) the modulating tones shall be 90 Hz and 150 Hz within 1 per cent for Facility Performance Category III — ILS;

d) the total harmonic content of the 90 Hz tone shall not exceed 10 per cent: additionally, for Facility Performance Category III equipment, the second harmonic of the 90 Hz tone shall not exceed 5 per cent;

e) the total harmonic content of the 150 Hz tone shall not exceed 10 per cent.

3.1.5.5.2.1. **Recommendation. —** *For Facility Performance Category I — ILS, the modulating tones should be 90 Hz and 150 Hz within plus or minus 1.5 per cent where practicable.*

3.1.5.5.2.2. For Facility Performance Category III glide path equipment, the depth of amplitude modulation of the radio frequency carrier at the power supply frequency or harmonics, or at other noise frequencies, shall not exceed 1 per cent.

3.1.5.5.3. The modulation shall be phase-locked so that within the ILS half glide path sector, the demodulated 90 Hz and 150 Hz wave forms pass through zero in the same direction within:

a) for Facility Performance Categories I and II — ILS glide paths: 20 degrees;

b) for Facility Performance Category III — ILS glide paths: 10 degrees, of phase relative to the 150 Hz component, every half cycle of the combined 90 Hz and 150 Hz wave form.

Note 1: *The definition of phase relationship in this manner is not intended to imply a requirement for measurement of phase within the ILS half glide path sector.*

Note 2: *Material relating to such measures is given in GM on the application of the SARPs for radio navigation aids,figure 6.*

*3.1.5.5.3.1.*With two-frequency glide path systems, 3.1.5.5.3 shall apply to each carrier. In addition, the 90 Hz modulating tone of one carrier shall be phase-locked to the 90 Hz modulating tone of the other carrier so that the demodulated wave forms pass through zero in the same direction within:

a) for Facility Performance Categories I and II — ILS glide paths: 20 degrees;

b) for Facility Performance Category III — ILS glide paths: 10 degrees, of phase relative to 90 Hz. Similarly, the 150 Hz tones of the two carriers shall be phase-locked so that the demodulated wave forms pass through zero in the same direction, within:

1 - for Facility Performance Categories I and II — ILS glide paths: 20 degrees;

2 - for Facility Performance Category III — ILS glide paths: 10 degrees, of phase relative to 150 Hz.

3.1.5.5.3.2. Alternative two-frequency glide path systems that employ audio phasing different from the normal in-phase condition

described in 3.1.5.5.3.1 shall be permitted. In these alternative systems, the 90 Hz to 90 Hz phasing and the 150 Hz to 150 Hz phasing shall be adjusted to their nominal values to within limits equivalent to those stated in 3.1.5.5.3.1.

Note: *This is to ensure correct airborne receiver operation within the glide path sector where the two carrier signal strengths are approximately equal.*

3.1.5.5.4. **Recommendation. —** *Undesired frequency and phase modulation on ILS glide path radio frequency carriers that can affect the displayed DDM values in glide path receivers should be minimized to the extent practical*.

Note: *Relevant guidance material is given in GM on application SARPs for radio navigation aids, p.2.15.*

3.1.5.6. Displacement sensitivity

3.1.5.6.1. For Facility Performance Category I — ILS glide paths, the nominal angular displacement sensitivity shall correspond to a DDM of 0.0875 at angular displacements above and below the glide path between 0.07 θ and 0.14 θ.

Note: *The above is not intended to preclude glide path systems which inherently have asymmetrical upper and lower sectors.*

3.1.5.6.2. **Recommendation. —** *For Facility Performance Category I — ILS glide paths, the nominal angular displacement sensitivity should correspond to a DDM of 0.0875 at an angular displacement below the glide path of 0.12 θ with a tolerance of plus or minus 0.02 θ. The upper and lower sectors should be as symmetrical as practicable within the limits specified in 3.1.5.6.1.*

3.1.5.6.3. For Facility Performance Category II — ILS glide paths, the angular displacement sensitivity shall be as symmetrical as practicable. The nominal angular displacement sensitivity shall correspond to a DDM of 0.0875 at an angular displacement of:

a) 0.12 θ below path with a tolerance of plus or minus 0.02 θ;

b) 0.12 θ above path with a tolerance of plus 0.02 θ and minus 0.05 θ.

3.1.5.6.4. For Facility Performance Category III — ILS glide paths, the nominal angular displacement sensitivity shall correspond to a DDM of 0.0875 at angular displacements above and below the glide path of 0.12 θ with a tolerance of plus or minus 0.02 θ.

3.1.5.6.5. The DDM below the ILS glide path shall increase smoothly for decreasing angle until a value of 0.22 DDM is reached. This value shall be achieved at an angle not less than 0.30 θ above the horizontal. However, if it is achieved at an angle above 0.45 θ, the DDM value shall not be less than 0.22 at least down to 0.45 θ or to such lower angle, down to 0.30 θ, as required to safeguard the promulgated glide path intercept procedure.

Note: *The limits of glide path equipment adjustment are pictorially represented in Figure 11 of GM on the application of the SARPs for radio navigation aids.*

3.1.5.6.6. For Facility Performance Category I — ILS glide paths, the angular displacement sensitivity shall be adjusted and maintained within plus or minus 25 per cent of the nominal value selected.

3.1.5.6.7. For Facility Performance Category II — ILS glide paths, the angular displacement sensitivity shall be adjusted and maintained within plus or minus 20 per cent of the nominal value selected.

3.1.5.6.8. For Facility Performance Category III — ILS glide paths, the angular displacement sensitivity shall be adjusted and maintained within plus or minus 15 per cent of the nominal value selected.

3.1.5.7. Monitoring

3.1.5.7.1. The automatic monitor system shall provide a warning to the designated control points and cause radiation to cease within the periods specified in 3.1.5.7.3.1 if any of the following conditions persist:

a) shift of the mean ILS glide path angle equivalent to more than minus 0.075 θ to plus 0.10 θ from θ

b) in the case of ILS glide paths in which the basic functions are provided by the use of a single-frequency system, a reduction of power output to less than 50 per cent of normal, provided the glide path continues to meet the requirements of 3.1.5.3, 3.1.5.4 and 3.1.5.5;

c) in the case of ILS glide paths in which the basic functions are provided by the use of two-frequency systems, a reduction of power output for either carrier to less than 80 per cent of normal, except that a greater reduction to between 80 per cent and 50 per cent of normal may be permitted, provided the glide path continues to meet the requirements of 3.1.5.3, 3.1.5.4 and 3.1.5.5;

Note: *It is important to recognize that a frequency change resulting in a loss of the frequency difference specified in 3.1.5.2.1 may produce a hazardous condition. This problem is of greater operational significance for Facility Performance Categories II and III installations. As necessary, this problem can be dealt with through special monitoring provisions or highly reliable circuitry.*

d) for Facility Performance Category I — ILS glide paths, a change of the angle between the glide path and the line below the glide path (150 Hz predominating) at which a DDM of 0.0875 is realized by more than the greater of:

i) plus or minus 0.0375 θ; or

ii) an angle equivalent to a change of displacement sensitivity to a value differing by 25 percent from the nominal value;

e) for Facility Performance Categories II and III — ILS glide paths, a change of displacement sensitivity to a value differing by more than 25 per cent from the nominal value;

f) lowering of the line beneath the ILS glide path at which a DDM of 0.0875 is realized to less than 0.7475 θ from horizontal;

g) a reduction of DDM to less than 0.175 within the specified coverage below the glide path sector.

Note 1: *The value of 0.7475* θ *from horizontal is intended to ensure adequate obstacle clearance. This value was derived from other parameters of the glide path and monitor specification. Since the measuring accuracy to four significant figures is not intended, the value of 0.75* θ *may be used as a monitor limit for this purpose. Guidance on obstacle clearance criteria is given in the* Procedures for Air Navigation Services — Aircraft Operations (PANS-OPS) *(Doc 8168).*

Note 2: *Subparagraphs f) and g) are not intended to establish a requirement for a separate monitor to protect against deviation of the lower limits of the half-sector below 0.7475* θ *from horizontal.*

Note 3: *At glide path facilities where the selected nominal angular displacement sensitivity corresponds to an angle below the ILS glide path which is close to or at the maximum limits specified in 3.1.5.6, it may be necessary to adjust the monitor operating limits to protect against sector deviations below 0.7475* θ *from horizontal.*

Note 4: *Guidance material relating to the condition described in g) appears in GM on the application of the SARPs for radio navigation aids., 2.4.12.*

3.1.5.7.2. **Recommendation.** — *Monitoring of the ILS glide path characteristics to smaller tolerances should be arranged in those cases where operational penalties would otherwise exist*.

3.1.5.7.3. The total period of radiation, including period(s) of zero radiation, outside the performance limits specified in 3.1.5.7.1 shall be as short as practicable, consistent with the need for avoiding interruptions of the navigation service provided by the ILS glide path.

3.1.5.7.3.1. The total period referred to under 3.1.5.7.3 shall not exceed under any circumstances:

- 6 seconds for Facility Performance Category I — ILS glide paths;
- 2 seconds for Facility Performance Categories II and III — ILS glide paths.

Note 1: *The total time periods specified are never-to-be-exceeded limits and are intended to protect aircraft in the final stages of approach against prolonged or repeated periods of ILS glide path guidance outside the monitor limits. For this reason, they include not only the initial period of outside tolerance operation but also the total of any or all periods of outside tolerance radiation, including periods of zero radiation, which might occur during action to restore service, for example, in the course of consecutive monitor functioning and consequent changeovers to glide path equipments or elements thereof.*

Note 2: *From an operation point of view, the intention is that no guidance outside the monitor limits be radiated after the time periods given, and that no further attempts be made to restore service until a period in the order of 20 seconds has elapsed.*

3.1.5.7.3.2. **Recommendation. —** *Where practicable, the total period specified under 3.1.5.7.3.1 above for Facility Performance Categories II and III — ILS glide paths should not exceed 1 second.*

3.1.5.7.4. Design and operation of the monitor system shall be consistent with the requirement that radiation shall cease and a warning shall be

provided at the designated remote control points in the event of failure of the monitor system itself.

3.1.5.8. Integrity and continuity of service levels and requirements

3.1.5.8.1. A glide path shall be assigned a level of integrity and continuity of service as given in 3.1.5.8.2 to 3.1.5.8.5.

Note: *Levels are used to provide the necessary information for the determination of the category of operation and associated minima, which are a function of the Facility Performance Category, the (separate) integrity and continuity of service level, and a number of operational factors (e.g. aircraft and crew qualification, meteorological conditions, and runway features). If a glide path does not meet its required integrity and continuity of service level, some operational use may still be possible, as stated in the Manual of All-Weather Operations (Doc 9365), GM on ILS facility classification and downgrading. Similarly, if a glide path exceeds the minimum integrity and continuity of service level, more demanding operations may be possible.*

3.1.5.8.2. The glide path level shall be Level 1 if either:

1) the glide path's integrity of service or its continuity of service, or both, are not demonstrated; or

2) the glide path's integrity of service and its continuity of service are both demonstrated, but at least one of them does not meet the requirements of Level 2.

3.1.5.8.2.1 **Recommendation.***The probability of not losing the radiated guidance signal shall be less than 1 – 1.0 × 10^{-7} in any one landing forLevel 1 glide path.*

3.1.5.8.2.2 **Recommendation.—** *The probability of not losing the radiated guidance signal should exceed 1 – 4 × 10^{-6} in any period of 15 seconds for Level I glide paths (equivalent to 1 000 hours mean time between outages).*

Note: *A glide path that meets both Recommended Practices 3.1.5.8.2.1 and 3.1.5.8.2.2 also meets Standard 3.1.5.8.3 (Level 2 performance) and is therefore to be identified as Level 2.*

3.1.5.8.2.3 **Recommendation.—** *In the event that the integrity value for a Level 1 glide path is not available or cannot be readily calculated, a detailed analysis should be performed to assure proper monitor fail-safe operation.*

3.1.5.8.3. The glide path level shall be Level 2 if:

— the probability of not radiating false guidance signals is not less than 1 – 1.0 x 10^{-7} in any one landing; and

— the probability of not losing the radiated guidance is greater 1 – 4 × 10^{-6} in any period of 15 seconds (equivalent to 1 000 hours mean time between outages).

3.1.5.8.4. The glide path level shall be Level 3 or 4 if:

— the probability of not radiating false guidance signals is not less than 1 – 0.5 × 10^{-9} in any one landing; and

— the probability of not losing the radiated guidance is greater than $1 – 2 \times 10^{-6}$ in any period of 15 seconds (equivalent to 2 000 hours mean time between outages).

Note 1: *The requirements for glide path Level 3 and Level 4 are the same. The declaration of the glide path integrity and continuity of service levels should match the declaration of the localizer (i.e. the glide path is declared as Level 4 if the localizer is meeting Level 4).*

Note 2: *Information on ways to achieve integrity and continuity of service is given in 2.8 of GM.*

3.1.6. LOCALIZER AND GLIDE PATH FREQUENCY PAIRING

3.1.6.1. The pairing of the runway localizer and glide path transmitter frequencies of an instrument landing system shall be taken from the following list.

Localizer (MHz)	Glide path (MHz)	Localizer (MHz)	Glide path (MHz)
108.1	334.7	110.1	334.4
108.15	334.55	110.15	334.25
108.3	334.1	110.3	335.0
108.35	333.95	110.35	334.85
108.5	329.9	110.5	329.6
108.55	329.75	110.55	329.45
108.7	330.5	110.7	330.2
108.75	330.35	110.75	330.05
108.9	329.3	110.9	330.8
108.95	329.15	110.95	330.65
109.1	331.4	111.1	331.7
109.15	331.25	111.15	331.55
109.3	332.0	111.3	332.3
109.35	331.85	111.35	332.15
109.5	332.6	111.5	332.9
109.55	332.45	111.55	332.75
109.7	333.2	111.7	333.5
109.75	333.05	111.75	333.35
109.9	333.8	111.9	331.1
109.95	333.65	111.95	330.95

3.1.6.1.1. In those regions where the requirements for runway localizer and glide path transmitter frequencies of an instrument landing system do not justify more than 20 pairs, they shall be selected sequentially, as required, from the following list:

Sequence number	Localizer (MHz)	Glide path (MHz)
1	110.3	335.0
2	109.9	333.8
3	109.5	332.6
4	110.1	334.4
5	109.7	333.2
6	109.3	332.0
7	109.1	331.4
8	110.9	330.8
9	110.7	330.2

Sequence number	Localizer (MHz)	Glide path (MHz)
10	110.5	329.6
11	108.1	334.7
12	108.3	334.1
13	108.5	329.9
14	108.7	330.5
15	108.9	329.3
16	111.1	331.7
17	111.3	332.3
18	111.5	332.9
19	111.7	333.5
20	111.9	331.1

3.1.6.2. Where existing ILS localizers meeting national requirements are operating on frequencies ending in even tenths of a megahertz, they shall be reassigned frequencies, conforming with 3.1.6.1 or 3.1.6.1.1 as soon as practicable and may continue operating on their present assignments only until this reassignment can be effected.

3.1.6.3. Existing ILS localizers in the international service operating on frequencies ending in odd tenths of a megahertz shall not be assigned new frequencies ending in odd tenths plus one twentieth of a megahertz except where, by regional agreement, general use may be made of any of the channels listed in 3.1.6.1.

3.1.7. VHF MARKER BEACONS

Note: *Requirements relating to marker beacons apply only when one or more marker beacons are installed.*

3.1.7.1. General

a) There shall be two marker beacons in each installation except where, in the opinion of the Competent Authority, a single marker beacon is considered to be sufficient. A third marker beacon may be added whenever, in the opinion of the Competent Authority, an additional beacon is required because of operational procedures at a particular site.

b) A marker beacon shall conform to the requirements prescribed in 3.1.7. When the installation comprises only two marker beacons, the requirements applicable to the middle marker and to the outer marker shall be complied with. When the installation comprises only one marker beacon, the requirements applicable to either the middle or the outer marker shall be complied with. If marker beacons are replaced by DME, the requirements of 3.1.7.6.5 shall apply.

c) The marker beacons shall produce radiation patterns to indicate predetermined distance from the threshold along the ILS glide path.

3.1.7.1.1. When a marker beacon is used in conjunction with the back course of a localizer, it shall conform with the marker beacon characteristics specified in 3.1.7.

3.1.7.1.2. Identification signals of marker beacons used in conjunction with the back course of a localizer shall be clearly distinguishable from the inner, middle and outer marker beacon identifications, as prescribed in 3.1.7.5.1.

3.1.7.2. Radio frequency

3.1.7.2.1. The marker beacons shall operate at 75 MHz with a frequency tolerance of plus or minus 0.005 per cent and shall utilize horizontal polarization.

3.1.7.3. Coverage

3.1.7.3.1. The marker beacon system shall be adjusted to provide coverage over the following distances, measured on the ILS glide path and localizer course line:

a) inner marker: 150 m plus or minus 50 m (500 ft plus or minus 160 ft);

b) middle marker: 300 m plus or minus 100 m (1 000 ft plus or minus 325 ft);

c) outer marker: 600 m plus or minus 200 m (2 000 ft plus or minus 650 ft).

3.1.7.3.2. The field strength at the limits of coverage specified in 3.1.7.3.1 shall be 1.5 millivolts per metre (minus 82 dBW/ m^2). In addition, the field strength within the coverage area shall rise to at least 3.0 millivolts per metre (minus 76 dBW/m^2).

Note 1: *In the design of the ground antenna, it is advisable to ensure that an adequate rate of change of field strength is provided at the edges of coverage. It is also advisable to ensure that aircraft within the localizer course sector will receive visual indication.*

Note 2: *Satisfactory operation of a typical airborne marker installation will be obtained if the sensitivity is so adjusted that visual indication will be obtained when the field strength is 1.5 millivolts per metre (minus 82 dBW/m^2).*

3.1.7.4. Modulation

3.1.7.4.1. The modulation frequencies shall be as follows:

a) inner marker: 3 000 Hz;

b) middle marker: 1 300 Hz;

c) outer marker: 400 Hz.

The frequency tolerance of the above frequencies shall be plus or minus 2.5 per cent, and the total harmonic content of each of the frequencies shall not exceed 15 per cent.

3.1.7.4.2. The depth of modulation of the markers shall be 95 per cent plus or minus 4 per cent.

3.1.7.5. Identification

3.1.7.5.1. The carrier energy shall not be interrupted. The audio frequency modulation shall be keyed as follows:

a) *inner marker:* 6 dots per second continuously;

b) *middle marker:* a continuous series of alternate dots and dashes, the dashes keyed at the rate of 2 dashes per second, and the dots at the rate of 6 dots per second;

c) *outer marker:* 2 dashes per second continuously.

These keying rates shall be maintained to within plus or minus 15 per cent.

3.1.7.6. Siting

3.1.7.6.1. The inner marker shall be located so as to indicate in low visibility conditions the imminence of arrival at the runway threshold.

3.1.7.6.1.1 **Recommendation**. — *If the radiation pattern is vertical, the inner marker should be located between 75 m (250 ft) and 450 m (1 500 ft) from the threshold and at not more than 30 m (100 ft) from the extended centre line of the runway*.

Note 1: *It is intended that the inner marker pattern should intercept the downward extended straight portion of the nominal ILS glide path at the lowest decision height applicable in Category II operations.*

Note 2: *Care must be exercised in siting the inner marker to avoid interference between the inner and middle markers. Details regarding the siting of inner markers are contained in GM on the application of the SARPs for radio navigation aids, 2.10.*

3.1.7.6.1.2 **Recommendation.—** *If the radiation pattern is other than vertical, the equipment should be located so as to produce a field within the course sector and ILS glide path sector that is substantially similar to that produced by an antenna radiating a vertical pattern and located as prescribed in 3.1.7.6.1.1*.

3.1.7.6.2. The middle marker shall be located so as to indicate the imminence, in low visibility conditions, of visual approach guidance.

3.1.7.6.2.1 **Recommendation. —** *If the radiation pattern is vertical, the middle marker should be located 1 050 m (3 500 ft) plus or minus 150 m (500 ft), from the landing threshold at the approach end of the runway and at not more than 75 m (250 ft) from the extended centre line of the runway*.

Note: *See GM on the application of the SARPs for radio navigation aids, 2.10, regarding the siting of inner and middle marker beacons.*

3.1.7.6.2.2 **Recommendation. —** *If the radiation pattern is other than vertical, the equipment should be located so as to produce a field within the course sector and ILS glide path sector that is substantially similar to that produced by an antenna radiating a vertical pattern and located as prescribed in 3.1.7.6.2.1*.

3.1.7.6.3. The outer marker shall be located so as to provide height, distance and equipment functioning checks to aircraft on intermediate and final approach.

3.1.7.6.3.1 **Recommendation. —** *The outer marker should be located 7.2 km (3.9 NM) from the threshold except that, where for topographical or operational reasons this distance is not practicable, the outer marker may be located between 6.5 and 11.1 km (3.5 and 6 NM) from the threshold*.

3.1.7.6.4. **Recommendation. —** *If the radiation pattern is vertical, the outer marker should be not more than 75 m (250 ft) from the extended centre line of the runway. If the radiation pattern is other than vertical, the equipment should be located so as to produce a field within the course sector and ILS glide path sector that is substantially similar to that produced by an antenna radiating a vertical pattern*.

3.1.7.6.5. The positions of marker beacons, or where applicable, the equivalent distance(s) indicated by the DME when used as an alternative to part or all of the marker beacon component of the ILS, shall be published in accordance with the provisions of AAR-AIS.

3.1.7.6.5.1 When so used, the DME shall provide distance information operationally equivalent to that furnished by marker beacon(s).

3.1.7.6.5.2 When used as an alternative for the middle marker, the DME shall be frequency paired with the ILS localizer and sited so as to minimize the error in distance information.

3.1.7.6.5.3 The DME in 3.1.7.6.5 shall conform to the specification in 3.5.

3.1.7.7. Monitoring

3.1.7.7.1. Suitable equipment shall provide signals for the operation of an automatic monitor. The monitor shall transmit a warning to a control point if either of the following conditions arise:

a) failure of the modulation or keying;

b) reduction of power output to less than 50 per cent of normal.

3.1.7.7.2. **Recommendation.** — *For each marker beacon, suitable monitoring equipment should be provided which will indicate at the appropriate location a decrease of the modulation depth below 50 per cent*.

3.2. SPECIFICATION FOR PRECISION APPROACH RADAR SYSTEM

Note: *Slant distances are used throughout this specification.*

3.2.1 The precision approach radar system shall comprise the following elements:

3.2.1.1. The precision approach radar element (PAR).

3.2.1.2. The surveillance radar element (SRE).

3.2.2 When the PAR only is used, the installation shall be identified by the term PAR or precision approach radar and not by the term “precision approach radar system”.

3.2.3. THE PRECISION APPROACH RADAR ELEMENT (PAR)

3.2.3.1. Coverage

3.2.3.1.1. The PAR shall be capable of detecting and indicating the position of an aircraft of 15 m^2 echoing area or larger, which is within a space bounded by a 20-degree azimuth sector and a 7-degree elevation sector, to a distance of at least 16.7 km (9 NM) from its respective antenna.

Note: *For guidance in determining the significance of the echoing areas of aircraft, the following table is included:*

-private flyer (single-engined): 5 to 10 m^2;
-small twin-engined aircraft: from 15 m^2;
-medium twin-engined aircraft: from 25 m^2;
-four-engined aircraft: from 50 to 100 m^2.

3.2.3.2. Siting

3.2.3.2.1. The PAR shall be sited and adjusted so that it gives complete coverage of a sector with its apex at a point 150 m (500 ft) from the touchdown in the direction of the stop end of the runway and extending plus or minus 5 degrees about the runway centre line in azimuth and from minus 1 degree to plus 6 degrees in elevation.

Note 1: *Paragraph 3.2.3.2.1 can be met by siting the equipment with a set-back from the touchdown, in the direction of the stop end of the runway, of 915 m (3 000 ft) or more, for an offset of 120 m (400 ft) from the runway centre line, or of 1 200 m (4 000 ft) or more, for an offset of 185 m (600 ft) when the equipment is aligned to scan plus or minus 10 degrees about the centre line of the runway. Alternatively, if the equipment is aligned to scan 15 degrees to one side and 5 degrees to the other side of the centre line of the runway, then the minimum set-back can be reduced to 685 m (2 250 ft) and 915 m (3 000 ft) for offsets of 120 m (400 ft) and 185 m (600 ft) respectively.*

Note 2: *Diagrams illustrating the siting of PAR are given in GM on the application of the SARPs for radio navigation aids.*

3.2.3.3. Accuracy

3.2.3.3.1. *Azimuth accuracy*. Azimuth information shall be displayed in such a manner that left-right deviation from the on-course line shall be easily observable. The maximum permissible error with respect to the deviation from the on-course line shall be either 0.6 per cent of the distance from the PAR antenna plus 10 per cent of the deviation from the on-course line or 9 m (30 ft), whichever is greater. The equipment shall be so sited that the error at the touchdown shall not exceed 9 m (30 ft). The equipment shall be so aligned and adjusted that the displayed error at the touchdown shall be a minimum and shall not exceed 0.3 per cent of the distance from the PAR antenna or 4.5 m (15 ft), whichever is greater. It shall be possible to resolve the positions of two aircraft which are at 1.2 degrees in azimuth of one another.

3.2.3.3.2. *Elevation accuracy.* Elevation information shall be displayed in such a manner that up-down deviation from the descent path for which the equipment is set shall be easily observable. The maximum permissible error with respect to the deviation from the on-course line

shall be 0.4 per cent of the distance from the PAR antenna plus 10 per cent of the actual linear displacement from the chosen descent path or 6 m (20 ft), whichever is greater. The equipment shall be so sited that the error at the touchdown shall not exceed 6 m (20 ft). The equipment shall be so aligned and adjusted that the displayed error at the touchdown shall be a minimum and shall not exceed 0.2 per cent of the distance from the PAR antenna or 3 m (10 ft), whichever is greater. It shall be possible to resolve the positions of two aircraft that are at 0.6 degree in elevation of one another.

3.2.3.3.3. *Distance accuracy.* The error in indication of the distance from the touchdown shall not exceed 30 m (100 ft) plus 3 per cent of the distance from the touchdown. It shall be possible to resolve the positions of two aircraft which are at 120 m (400 ft) of one another on the same azimuth.

3.2.3.4. Information shall be made available to permit the position of the controlled aircraft to be established with respect to other aircraft and obstructions. Indications shall also permit appreciation of ground speed and rate of departure from or approach to the desired flight path.

3.2.3.5. Information shall be completely renewed at least once every second.

3.2.4. THE SURVEILLANCE RADAR ELEMENT (SRE)

3.2.4.1. A surveillance radar used as the SRE of a precision approach radar system shall satisfy at least the following broad performance requirements.

3.2.4.2. Coverage

3.2.4.2.1. The SRE shall be capable of detecting aircraft of 15 m^2 echoing area and larger, which are in line of sight of the antenna within a volume described as follows:

The rotation through 360 degrees about the antenna of a vertical plane surface bounded by a line at an angle of 1.5 degrees above the horizontal plane of the antenna, extending from the antenna to 37 km (20 NM); by a vertical line at 37 km (20 NM) from the intersection with the 1.5-degree line up to 2 400 m (8 000 ft) above the level of the antenna; by a horizontal line at 2 400 m (8 000 ft) from 37 km (20 NM) back towards the antenna to the intersection with a line from the antenna at 20 degrees above the horizontal plane of the antenna, and by a 20-degree line from the intersection with the 2 400 m (8 000 ft) line to the antenna.

3.2.4.2.2. **Recommendation. —** *Efforts should be made in development to increase the coverage on an aircraft of 15 m^2 echoing area to at least the volume obtained by amending 3.2.4.2.1 above with the following substitutions*:

-for 1.5 degrees, read 0.5 degree;
-for 37 km (20 NM), read 46.3 km (25 NM);
-for 2 400 m (8 000 ft), read 3 000 m (10 000 ft);
-for 20 degrees, read 30 degrees.

Note: *A diagram illustrating the vertical coverage of SRE is given in GM on the application of the SARPs for radio navigation aids.*

3.2.4.3. Accuracy

3.2.4.3.1. *Azimuth accuracy.* The indication of position in azimuth shall be within plus or minus 2 degrees of the true position. It shall be possible to resolve the positions of two aircraft which are at 4 degrees of azimuth of one another.

3.2.4.3.2. *Distance accuracy*. The error in distance indication shall not exceed 5 per cent of true distance or 150 m (500 ft), whichever is the greater. It shall be possible to resolve the positions of two aircraft that are separated by a distance of 1 per cent of the true distance from the point of observation or 230 m (750 ft), whichever is the greater.

3.2.4.3.2.1 **Recommendation. —** *The error in distance indication should not exceed 3 per cent of the true distance or 150 m (500 ft), whichever is the greater.*

3.2.4.4. The equipment shall be capable of completely renewing the information concerning the distance and azimuth of any aircraft within the coverage of the equipment at least once every 4 seconds.

3.2.4.5. **Recommendation.** — *Efforts should be made to reduce, as far as possible, the disturbance caused by ground echoes or echoes from clouds and precipitation*.

3.3. SPECIFICATION FOR VHF OMNIDIRECTIONAL RADIO RANGE (VOR)

3.3.1. GENERAL

3.3.1.1. The VOR shall be constructed and adjusted so that similar instrumental indications in aircraft represent equal clockwise angular deviations (bearings), degree for degree from magnetic North as measured from the location of the VOR.

3.3.1.2. The VOR shall radiate a radio frequency carrier with which are associated two separate 30 Hz modulations. One of these modulations shall be such that its phase is independent of the azimuth of the point of observation (reference phase). The other modulation (variable phase) shall be such that its phase at the point of observation differs from that of the reference phase by an angle equal to the bearing of the point of observation with respect to the VOR.

3.3.1.3. The reference and variable phase modulations shall be in phase along the reference magnetic meridian through the station.

Note: *The reference and variable phase modulations are in phase when the maximum value of the sum of the radio frequency carrier and the sideband energy due to the variable phase modulation occurs at the same time as the highest instantaneous frequency of the reference phase modulation.*

3.3.2. RADIO FREQUENCY

3.3.2.1. The VOR shall operate in the band 111.975 MHz to 117.975 MHz except that frequencies in the band 108 MHz to 111.975 MHz may be used when, in accordance with the provisions of Volume V, Chapter 4, 4.2.1 and 4.2.3.1, the use of such frequencies is acceptable. The highest assignable frequency shall be 117.950 MHz. The channel separation shall be in increments of 50 kHz referred to the highest assignable frequency. In areas where 100 kHz or 200 kHz channel spacing is in general use, the frequency tolerance of the radio frequency carrier shall be plus or minus 0.005 per cent.

3.3.2.2. The frequency tolerance of the radio frequency carrier of all new installations implemented after 23 May 1974 in areas where 50 kHz channel spacing is in use shall be plus or minus 0.002 per cent.

3.3.2.3. In areas where new VOR installations are implemented and are assigned frequencies spaced at 50 kHz from existing VORs in the same area, priority shall be given to ensuring that the frequency tolerance of the radio frequency carrier of the existing VORs is reduced to plus or minus 0.002 per cent.

3.3.3. POLARIZATION AND PATTERN ACCURACY

3.3.3.1. The emission from the VOR shall be horizontally polarized. The vertically polarized component of the radiation shall be as small as possible.

Note: *It is not possible at present to state quantitatively the maximum permissible magnitude of the vertically polarized component of the radiation from the VOR. (Information is provided in the Manual on Testing of Radio Navigation Aids (Doc 8071) as to flight checks that can be carried out to determine the effects of vertical polarization on the bearing accuracy).*

3.3.3.2. The ground station contribution to the error in the bearing information conveyed by the horizontally polarized radiation from the VOR for all elevation angles between 0 and 40 degrees, measured from the centre of the VOR antenna system, shall be within plus or minus 2 degrees.

3.3.4. COVERAGE

3.3.4.1. The VOR shall provide signals such as to permit satisfactory operation of a typical aircraft installation at the levels and distances required for operational reasons, and up to an elevation angle of 40 degrees.

3.3.4.2. **Recommendation.—** *The field strength or power density in space of VOR signals required to permit satisfactory operation of a typical aircraft installation at the minimum service level at the maximum specified service radius should be 90 microvolts per metre or minus 107 dBW/m^2.*

Note: *Typical equivalent isotropically radiated powers (EIRPs) to achieve specified ranges are contained in 3.1 of GM on the application of the SARPs for radio navigation aids.The definition of EIRP is contained in 3.5.1.*

3.3.5. MODULATIONS OF NAVIGATIONAL SIGNALS

3.3.5.1. The radio frequency carrier as observed at any point in space shall be amplitude modulated by two signals as follows:

a) a subcarrier of 9 960 Hz of constant amplitude, frequency modulated at 30 Hz:

1) for the conventional VOR, the 30 Hz component of this FM subcarrier is fixed without respect to azimuth and is termed the “reference phase” and shall have a deviation ratio of 16 plus or minus 1 (i.e. 15 to 17);

2) for the Doppler VOR, the phase of the 30 Hz component varies with azimuth and is termed the “variable phase” and shall have a deviation ratio of 16 plus or minus 1 (i.e. 15 to 17) when observed at any angle of elevation up to 5 degrees, with a minimum deviation ratio of 11 when observed at any angle of elevation above 5 degrees and up to 40 degrees;

b) a 30 Hz amplitude modulation component:

1) for the conventional VOR, this component results from a rotating field pattern, the phase of which varies with azimuth, and is termed the “variable phase”;

2) for the Doppler VOR, this component, of constant phase with relation to azimuth and constant amplitude, is radiated omnidirectionally and is termed the “reference phase”.

3.3.5.2. The nominal depth of modulation of the radio frequency carrier due to the 30 Hz signal or the subcarrier of 9 960 Hz shall be within the limits of 28 per cent and 32 per cent.

Note: *This requirement applies to the transmitted signal observed in the absence of multipath.*

3.3.5.3. The depth of modulation of the radio frequency carrier due to the 30 Hz signal, as observed at any angle of elevation up to 5 degrees, shall be within the limits of 25 to 35 per cent. The depth of modulation of the radio frequency carrier due to the 9 960 Hz signal, as observed at any angle of elevation up to 5 degrees, shall be within the limits of 20 to 55 per cent on facilities without voice modulation, and within the limits of 20 to 35 per cent on facilities with voice modulation.

Note: *When modulation is measured during flight testing under strong dynamic multipath conditions, variations in the received modulation percentages are to be expected. Short-term variations beyond these values may be acceptable. The Manual on Testing of Radio Navigation Aids (Doc 8071) contains additional information on the application of airborne modulation tolerances.*

3.3.5.4. The variable and reference phase modulation frequencies shall be 30 Hz within plus or minus 1 per cent.

3.3.5.5. The subcarrier modulation mid-frequency shall be 9 960 Hz within plus or minus 1 per cent.

3.3.5.6.

a) For the conventional VOR, the percentage of amplitude modulation of the 9 960 Hz subcarrier shall not exceed 5 per cent.

b) For the Doppler VOR, the percentage of amplitude modulation of the 9 960 Hz subcarrier shall not exceed 40 per cent when measured at a point at least 300 m (1 000 ft) from the VOR.

3.3.5.7. Where 50 kHz VOR channel spacing is implemented, the sideband level of the harmonics of the 9 960 Hz component in the radiated signal shall not exceed the following levels referred to the level of the 9 960 Hz sideband:

Subcarrier	Level
9 960 Hz	0 dB reference
2nd harmonic	–30 dB
3rd harmonic	–50 dB
4th harmonic and above	–60 dB

3.3.6. VOICE AND IDENTIFICATION

3.3.6.1. If the VOR provides a simultaneous communication channel ground-to-air, it shall be on the same radio frequency carrier as used for the navigational function. The radiation on this channel shall be horizontally polarized.

3.3.6.2. The peak modulation depth of the carrier on the communication channel shall not be greater than 30 per cent.

3.3.6.3. The audio frequency characteristics of the speech channel shall be within 3 dB relative to the level at 1 000 Hz over the range 300 Hz to 3 000 Hz.

3.3.6.4. The VOR shall provide for the simultaneous transmission of a signal of identification on the same radio frequency carrier as that used for the navigational function. The identification signal radiation shall be horizontally polarized.

3.3.6.5. The identification signal shall employ the International Morse Code and consist of two or three letters. It shall be sent at a speed corresponding to approximately 7 words per minute. The signal shall be repeated at least once every 30 seconds and the modulation tone shall be 1 020 Hz within plus or minus 50 Hz.

3.3.6.5.1. **Recommendation. —** *The identification signal should be transmitted at least three times each 30 seconds, spaced equally within that time period. One of these identification signals may take the form of a voice identification.*

Note: *Where a VOR and DME are associated in accordance with 3.5.2.5, the identification provisions of 3.5.3.6.4 influence the VOR identification.*

3.3.6.6. The depth to which the radio frequency carrier is modulated by the code identification signal shall be close to, but not in excess of 10 per cent except that, where a communication channel is not provided, it shall be permissible to increase the modulation by the code identification signal to a value not exceeding 20 per cent.

3.3.6.6.1. **Recommendation. —** *If the VOR provides a simultaneous communication channel ground-to-air, the modulation depth of the code identification signal should be 5 plus or minus 1 per cent in order to provide a satisfactory voice quality*.

3.3.6.7. The transmission of speech shall not interfere in any way with the basic navigational function. When speech is being radiated, the code identification shall not be suppressed.

3.3.6.8. The VOR receiving function shall permit positive identification of the wanted signal under the signal conditions encountered within the specified coverage limits, and with the modulation parameters specified at 3.3.6.5, 3.3.6.6 and 3.3.6.7 above.

3.3.7. MONITORING

3.3.7.1. Suitable equipment located in the radiation field shall provide signals for the operation of an automatic monitor. The monitor shall transmit a warning to a control point, and either remove the identification and navigation components from the carrier or cause radiation to cease if any one or a combination of the following deviations from established conditions arises:

a) a change in excess of 1 degree at the monitor site of the bearing information transmitted by the VOR;

b) a reduction of 15 per cent in the modulation components of the radio frequency signals voltage level at the monitor of either the subcarrier, or 30 Hz amplitude modulation signals, or both.

3.3.7.2. Failure of the monitor itself shall transmit a warning to a control point and either:

a) remove the identification and navigation components from the carrier; or

b) cause radiation to cease.

Note: *Guidance material on VOR appears in GM on the application of the SARPs for radio navigation aids.*

3.3.8. INTERFERENCE IMMUNITY PERFORMANCE FOR VOR RECEIVING SYSTEMS

3.3.8.1. The VOR receiving system shall provide adequate immunity to interference from two signal, third-order intermodulation products caused by VHF FM broadcast signals having levels in accordance with the following:

$$2N_1 + N_2 + 72 \leq 0$$

for VHF FM sound broadcasting signals in the range 107.7 – 108.0 MHz

and

$$2N_1 + N_2 + 3\left(24 - 20\log\frac{\Delta f}{0{,}4}\right) \leq 0$$

for VHF FM sound broadcasting signals below 107.7 MHz, where the frequencies of the two VHF FM sound broadcasting signals produce, within

the receiver, a two signal, third-order intermodulation product on the desired VOR frequency.

N_1 and N_2 are the levels (dBm) of the two VHF FM sound broadcasting signals at the VOR receiver input. Neither level shall exceed the desensitization criteria set forth in 3.3.8.2.

$\Delta f = 108.1 - f_1$, where f_1 is the frequency of N_1, the VHF FM sound broadcasting signal closer to 108.1 MHz.

3.3.8.2. The VOR receiving system shall not be desensitized in the presence of VHF FM broadcast signals having levels in accordance with the following table:

Frequency (MHz)	Maximum level of unwanted signal at receiver input (dBm)
88-102	+15
104	+10
106	+5
107.9	-10

Note 1: *The relationship is linear between adjacent points designated by the above frequencies.*

Note 2: *Material on immunity criteria to be used for the performance quoted in 3.3.8.1 and 3.3.8.2 is contained in GMon application SARPs for radio navigation aids, 3.6.5.*

3.4 SPECIFICATION FOR NON-DIRECTIONAL RADIO BEACON (NDB)

3.4.1. DEFINITIONS

Note: *In GM on the application of the SARPs for radio navigation aids.*

Average radius of rated coverage. The radius of a circle having the same area as the rated coverage.

Effective coverage. The area surrounding an NDB within which bearings can be obtained with an accuracy sufficient for the nature of the operation concerned.

Locator. An LF/MF NDB used as an aid to final approach.

Note: *A locator usually has an average radius of rated coverage of between 18.5 and 46.3 km (10 and 25 NM).*

Rated coverage. The area surrounding an NDB within which the strength of the vertical field of the ground wave exceeds the minimum value specified for the geographical area in which the radio beacon is situated.

Note: *The above definition is intended to establish a method of rating radio beacons on the normal coverage to be expected in the absence of sky wave transmission and/or anomalous propagation from the radio beacon concerned or interference from other LF/MF facilities, but taking into account the atmospheric noise in the geographical area concerned.*

3.4.2. COVERAGE

3.4.2.1. **Recommendation. —** *The minimum value of field strength in the rated coverage of an NDB should be 70°microvolts per metre*.

Note 1: *Material on the field strengths required particularly in the latitudes between 30°N and 30°S given in 6.1 of GM on application of the SARPs for RADIO NAVIGATION AIDS , and the relevant ITU provisions are given in Chapter VIII, Article 35, Section IV, Part B of the Radio Regulations.*

Note 2: *The selection of locations and times at which the field strength is measured is important in order to avoid abnormal results for the locality concerned; locations on air routes in the area around the beacon are operationally most significant.*

3.4.2.2. All notifications or promulgations of NDBs shall be based upon the average radius of the rated coverage.

Note 1: *In classifying radio beacons in areas where substantial variations in rated coverage may occur diurnally and seasonally, such variations should be taken into account.*

Note 2: *Beacons having an average radius of rated coverage of between 46.3 and 278 km (25 and 150NM) may be designated by the nearest multiple of 46.3 km (25 NM) to the average radius of rated coverage, and beacons of rated coverage over 278 km (150 NM) to the nearest multiple of 92.7 km (50 NM).*

3.4.2.3. **Recommendation. —** *Where the rated coverage of an NDB is materially different in various operationally significant sectors, its classification should be expressed in terms of the average radius of rated coverage and the angular limits of each sector as follows*:

Radius of coverage of sector/angular limits of sector expressed as magnetic bearing clockwise from the beacon.

Where it is desirable to classify an NDB in such a manner, the number of sectors should be kept to a minimum and preferably should not exceed two.

Note: *The average radius of a given sector of the rated coverage is equal to the radius of the corresponding circle-sector of the same area. Example:*
150/210° – 30°
100/30° – 210°.

3.4.3. LIMITATIONS IN RADIATED POWER

The power radiated from an NDB shall not exceed by more than 2 dB that necessary to achieve its agreed rated coverage, except that this power may be increased if coordinated regionally or if no harmful interference to other facilities will result.

3.4.4. RADIO FREQUENCIES

3.4.4.1. The radio frequencies assigned to NDBs shall be selected from those available in that portion of the spectrum between 190 kHz and 1 750 kHz.

3.4.4.2. The frequency tolerance applicable to NDBs shall be 0.01 per cent except that, for NDBs of antenna power above 200 W using frequencies of 1 606.5 kHz and above, the tolerance shall be 0.005 per cent.

3.4.4.3. **Recommendation**. — *Where two locators are used as supplements to an ILS, the frequency separation between the carriers of the two should be not less than 15 kHz to ensure correct operation of the radio compass, and preferably not more than 25 kHz in order to permit a quick tuning shift in cases where an aircraft has only one radio compass*.

3.4.4.4. Where locators associated with ILS facilities serving opposite ends of a single runway are assigned a common frequency, provision shall be made to ensure that the facility not in operational use cannot radiate.

3.4.5. IDENTIFICATION

3.4.5.1. Each NDB shall be individually identified by a two- or three-letter International Morse Code group transmitted at a rate corresponding to approximately 7 words per minute.

3.4.5.2. The complete identification shall be transmitted at least once every 30 seconds, except where the beacon identification is effected by on/off keying of the carrier. In this latter case, the identification shall be at approximately 1-minute intervals, except that a shorter interval may be used at particular NDB stations where this is found to be operationally desirable.

3.4.5.2.1. **Recommendation.** — *Except for those cases where the beacon identification is effected by on/off keying of the carrier, the identification signal should be transmitted at least three times each 30 seconds, spaced equally within that time period*.

3.4.5.3. For NDBs with an average radius of rated coverage of 92.7 km (50 NM) or less that are primarily approach and holding aids in the vicinity of an aerodrome, the identification shall be transmitted at least three times each 30 seconds, spaced equally within that time period.

3.4.5.4. The frequency of the modulating tone used for identification shall be 1 020 Hz plus or minus 50 Hz or 400 Hz plus or minus 25 Hz.

Note: *Determination of the figure to be used would be made regionally, in the light of the considerations contained in GM on the application of the SARPs for radio navigation aids.*

3.4.6. CHARACTERISTICS OF EMISSIONS

Note: *The following specifications are not intended to preclude employment of modulations or types of modulations that may be utilized in NDBs in addition to those specified for identification, including simultaneous identification and voice modulation, provided that these additional modulations do not materially affect the operational performance of the NDBs in conjunction with currently used airborne direction finders, and provided their use does not cause harmful interference to other NDB services.*

3.4.6.1. Except as provided in 3.4.6.1.1, all NDBs shall radiate an uninterrupted carrier and be identified by on/off keying of an amplitude modulating tone (NON/A2A).

3.4.6.1.1. NDBs other than those wholly or partly serving as holding, approach and landing aids, or those having an average radius of rated coverage of less than 92.7 km (50 NM), may be identified by on/off keying of the unmodulated carrier (NON/A1A) if they are in areas of high beacon density and/or where the required rated coverage is not practicable of

achievement because of:

a) radio interference from radio stations;

b) high atmospheric noise;

c) local conditions.

Note: *In selecting the types of emission, the possibility of confusion, arising from an aircraft tuning from a NON/A2A facility to a NON/A1A facility without changing the radio compass from "MCW" to "CW" operation, will need to be kept in mind.*

3.4.6.2. For each NDB identified by on/off keying of an audio modulating tone, the depth of modulation shall be maintained as near to 95 per cent as practicable.

3.4.6.3. For each NDB identified by on/off keying of an audio modulating tone, the characteristics of emission during identification shall be such as to ensure satisfactory identification at the limit of its rated coverage.

Note 1: *The foregoing requirement necessitates as high a percentage modulation as practicable, together with maintenance of an adequate radiated carrier power during identification.*

Note 2: *With a direction-finder pass bank of plus or minus 3 kHz about the carrier, a signal to noise ratio of 6 dB at the limit of rated coverage will, in general, meet the foregoing requirement.*

Note 3: *Some considerations with respect to modulation depth are contained in GM on application of the SARPs for RADIO NAVIGATION AIDS , 6.4.*

3.4.6.4. **Recommendation**. — *The carrier power of an NDB with NON/A2A emissions should not fall when the identity signal is being radiated except that, in the case of an NDB having an average radius of rated coverage exceeding 92.7 km (50 NM), a fall of not more than 1.5 dB may be accepted*.

3.4.6.5. Unwanted audio frequency modulations shall total less than 5 per cent of the amplitude of the carrier.

Note: *Reliable performance of airborne automatic direction-finding equipment (ADF) may be seriously prejudiced if the beacon emission contain modulation by an audio frequency equal or close to the loop switching frequency or its second harmonic. The loop switching frequencies in currently used equipment lie between 30 Hz and 120 Hz.*

3.4.6.6. The bandwidth of emissions and the level of spurious emissions shall be kept at the lowest value that the state of technique and the nature of the service permit.

Note: *Article S3 of the ITU Radio Regulations contains the general provisions with respect to technical characteristics of equipment and emission. The Radio Regulations contain specific provisions relating to necessary bandwidth, frequency tolerance, spurious emissions and classification of emissions (see Appendices APS1, APS2 and APS3).*

3.4.7. SITING OF LOCATORS

3.4.7.1. **Recommendation.** — *Where locators are used as a supplement to the ILS, they should be located at the sites of the outer and middle marker beacons. Where only one locator is used as a supplement to the ILS, preference should be given to location at the site of the outer marker*

beacon. Where locators are employed as an aid to final approach in the absence of an ILS, equivalent locations to those applying when an ILS is installed should be selected, taking into account the relevant obstacle clearance provisions of the PAN-OPS (Doc 8168).

3.4.7.2. **Recommendation.** — *Where locators are installed at both the middle and outer marker positions, they should be located, where practicable, on the same side of the extended centre line of the runway in order to provide a track between the locators which will be more nearly parallel to the centre line of the runway*.

3.4.8. MONITORING

3.4.8.1. For each NDB, suitable means shall be provided to enable detection of any of the following conditions at an appropriate location:

a) a decrease in radiated carrier power of more than 50 per cent below that required for the rated coverage;

b) failure to transmit the identification signal;

c) malfunctioning or failure of the means of monitoring itself.

3.4.8.2. **Recommendation. —** *When an NDB is operated from a power source having a frequency which is close to airborne ADF equipment switching frequencies, and where the design of the NDB is such that the power supply frequency is likely to appear as a modulation product on the emission, the means of monitoring should be capable of detecting such power supply modulation on the carrier in excess of 5 per cent*.

3.4.8.3. During the hours of service of a locator, the means of monitoring shall provide for a continuous check on the functioning of the locator as prescribed in 3.4.8.1 a), b) and c).

3.4.8.4. **Recommendation.—** *During the hours of service of an NDB other than a locator, the means of monitoring should provide for a continuous check on the functioning of the NDB as prescribed in 3.4.8.1 a), b) and c).*

Note: *Guidance material on the testing of NDBs is contained in 6.6. of GM on the application of the SARPs for radio navigation aids.*

3.5. SPECIFICATION FOR UHF DISTANCE MEASURING EQUIPMENT (DME)

Note: *In the following section, provision is made for two types of DME facility: DME/N for general application, and DME/P as outlined in 3.11.3.*

3.5.1. DEFINITIONS

Control motion noise (CMN). That portion of the guidance signal error which causes control surface, wheel and column motion and could affect aircraft attitude angle during coupled flight, but does not cause aircraft displacement from the desired course and/or glide path. (See 3.11.)

DME dead time. A period immediately following the decoding of a valid interrogation during which a received interrogation will not cause a reply to be generated.

Note: *Dead time is intended to prevent the transponder from replying to echoes resulting from multipath effects.*

DME/N. Distance measuring equipment, primarily serving operational needs of en-route or TMA navigation, where the "N" stands for narrow spectrum characteristics.

DME/P. The distance measuring element of the MLS, where the "P" stands for precise distance measurement. The spectrum characteristics are those of DME/N.

Equivalent isotropically radiated power (EIRP). The product of the power supplied to the antenna and the antenna gain in a given direction relative to an isotropic antenna (absolute or isotropic gain).

Final approach (FA) mode. The condition of DME/P operation which supports flight operations in the final approach and runway regions.

Initial approach (IA) mode. The condition of DME/P operation which supports those flight operations outside the final approach region and which is interoperable with DME/N.

Key down time. The time during which a dot or dash of a Morse character is being transmitted.

MLS approach reference datum. A point on the minimum glide path at a specified height above the threshold. (See 3.11.)

MLS datum point. The point on the runway centre line closest to the phase centre of the approach elevation antenna. (See 3.11.)

Mode W, X, Y, Z. A method of coding the DME transmissions by time spacing pulses of a pulse pair, so that each frequency can be used more than once.

Partial rise time. The time as measured between the 5 and 30 per cent amplitude points on the leading edge of the pulse envelope, i.e. between points h and i on Figures 3-1 and 3-2.

Path following error (PFE). That portion of the guidance signal error which could cause aircraft displacement from the desired course and/or glide path. (See 3.11.)

Pulse amplitude. The maximum voltage of the pulse envelope, i.e. A in Figure 3-1.

Pulse code. The method of differentiating between W, X, Y and Z modes and between FA and IA modes.

Pulse decay time. The time as measured between the 90 and 10 per cent amplitude points on the trailing edge of the pulse envelope, i.e. between points e and g on Figure 3-1.

Pulse duration. The time interval between the 50 per cent amplitude point on leading and trailing edges of the pulse envelope, i.e. between points b and f on Figure 3-1.

Pulse rise time. The time as measured between the 10 and 90 per cent amplitude points on the leading edge of the pulse envelope, i.e. between points a and c on Figure 3-1.

Reply efficiency. The ratio of replies transmitted by the transponder to the total of received valid interrogations.

Search. The condition which exists when the DME interrogator is attempting to acquire and lock onto the response to its own interrogations from the selected transponder.

System efficiency. The ratio of valid replies processed by the interrogator to the total of its own interrogations.

Track. The condition which exists when the DME interrogator has locked onto replies in response to its own interrogations, and is continuously providing a distance measurement.

Transmission rate. The average number of pulse pairs transmitted from the transponder per second.

Virtual origin. The point at which the straight line through the 30 per cent and 5 per cent amplitude points on the pulse leading edge intersects the 0 per cent amplitude axis (see Figure 3-2).

3.5.2. GENERAL

3.5.2.1. The DME system shall provide for continuous and accurate indication in the cockpit of the slant range distance of an equipped aircraft from an equipped ground reference point.

3.5.2.2. The system shall comprise two basic components, one fitted in the aircraft, the other installed on the ground. The aircraft component shall be referred to as the interrogator and the ground component as the transponder.

3.5.2.3. In operation, interrogators shall interrogate transponders which shall, in turn, transmit to the interrogator replies synchronized with the interrogations, thus providing means for accurate measurement of distance.

3.5.2.4. DME/P shall have two operating modes, IA and FA.

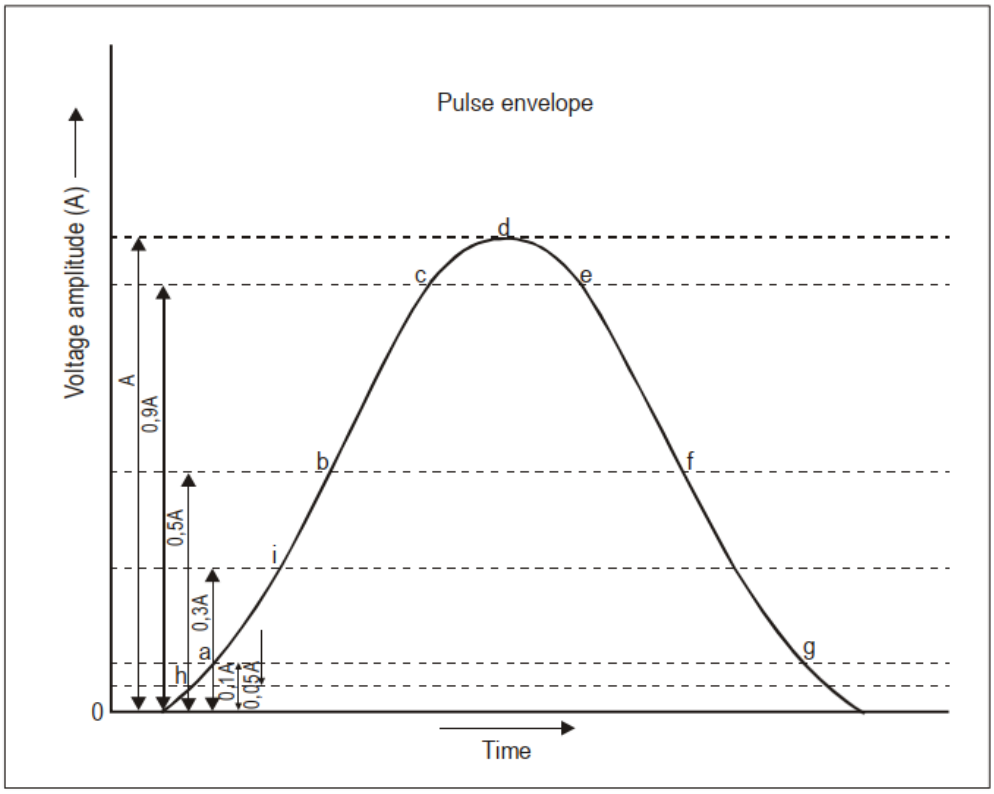

Figure 3-1

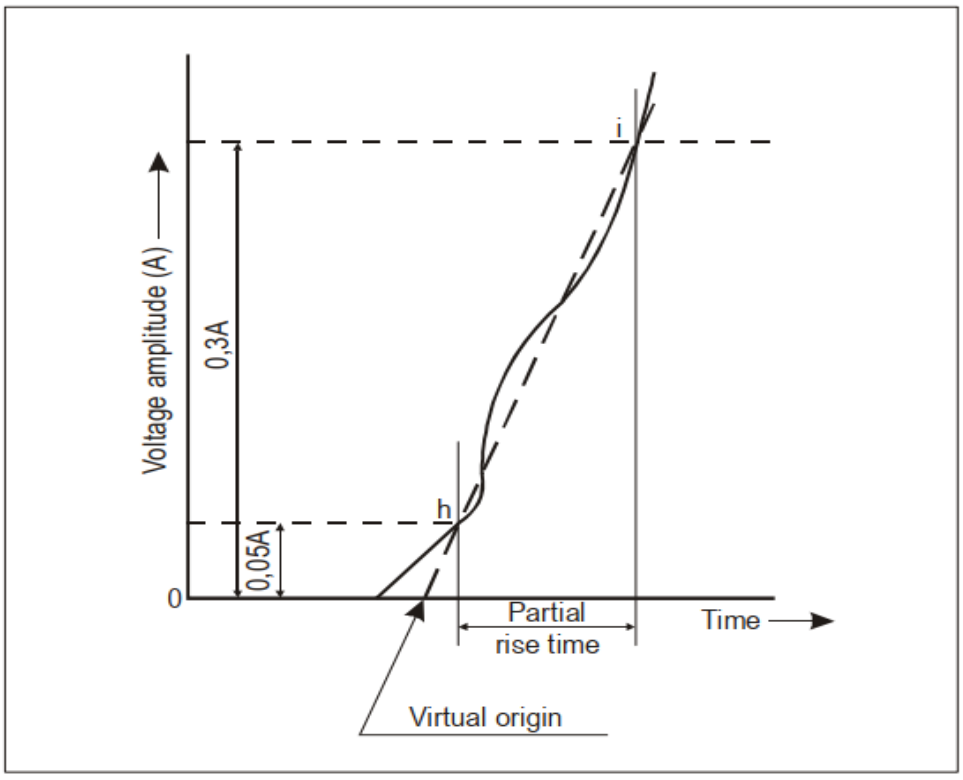

Figure 3-2

3.5.2.5. When a DME is associated with an ILS, MLS or VOR for the purpose of constituting a single facility, they shall:

a) be operated on a standard frequency pairing in accordance with 3.5.3.3.4;

b) be collocated within the limits prescribed for associated facilities in 3.5.2.6; and

c) comply with the identification provisions of 3.5.3.6.4.

3.5.2.6. Collocation limits for a DME facility associated with an ILS, MLS or VOR facility

3.5.2.6.1. Associated VOR and DME facilities shall be collocated in accordance with the following:

a) for those facilities used in terminal areas for approach purposes or other procedures where the highest position fixing accuracy of system capability is required, the separation of the VOR and DME antennas does not exceed 80 m (260 ft);

b) for purposes other than those indicated in a), the separation of the VOR and DME antennas does not exceed 600 m (2 000 ft).

3.5.2.6.2. Association of DME with ILS

Note: *GM on the application of the SARPs for radio navigation aids, 2.11 gives guidance on the association of DME with ILS.*

3.5.2.6.3. Association of DME with MLS

3.5.2.6.3.1 **Recommendation. —** *If a DME/P is used to provide ranging information, it should be sited as close as possible to the MLS azimuth facility.*

Note: *GM on the application of the SARPs for radio navigation aids, 7.1.6 give guidance on siting of DME with MLS. This guidance sets forth, in particular, appropriate steps to be taken to prevent different zero range indication if DME/P associated with MLS and DME/N associated with ILS serve the same runway.*

3.5.2.7. The Standards in 3.5.3, 3.5.4 and 3.5.5 denoted by ‡ shall apply only to DME equipment first installed after 1 January 1989.

3.5.3. SYSTEM CHARACTERISTICS

3.5.3.1. Performance

3.5.3.1.1. Range. The system shall provide a means of measurement of slant range distance from an aircraft to a selected transponder to the limit of coverage prescribed by the operational requirements for the selected transponder.

3.5.3.1.2. Coverage

3.5.3.1.2.1 When associated with a VOR, DME/N coverage shall be at least that of the VOR to the extent practicable.

3.5.3.1.2.2 When associated with either an ILS or an MLS, DME/N coverage shall be at least that of the respective ILS or of the MLS azimuth angle guidance coverage sectors.

3.5.3.1.2.3 DME/P coverage shall be at least that provided by the MLS azimuth angle guidance coverage sectors.

Note: *This is not intended to specify the operational range and coverage to which the system may be used; spacing of facilities already installed may limit the range in certain areas.*

3.5.3.1.3. Accuracy

3.5.3.1.3.1 System accuracy. The accuracy standards specified 3.5.3.1.4, 3.5.4.5 and 3.5.5.4 shall be met on a 95 per cent probability basis.

3.5.3.1.4. DME/P accuracy

Note 1: *In the following, two accuracy standards, 1 and 2, are stated for the DME/P to accommodate a variety of applications.*

Note 2: *Information on Accuracy standards is given in GM on the application of the SARPs for RADIO NAVIGATION AIDS, 7.3.2.*

3.5.3.1.4.1 Error components. The path following error (PFE) shall be comprised of those frequency components of the DME/P error at the output of the interrogator which lie below 1.5 rad/s. The control motion noise (CMN) shall be comprised of those frequency components of the DME/P error at the output of the interrogator which lie between 0.5 rad/s and 10 rad/s.

Note: *Specified error limits at a point are to be applied over a flight path that includes that point. Information on the interpretation of DME/P errors and the measurement of those errors over an interval appropriate for flight inspection is provided in GM on the application of the SARPs for radio navigation aids , 7.3.6.1.*

3.5.3.1.4.2 Errors on the extended runway centre line shall not exceed the values given in Table at the end of this chapter.

3.5.3.1.4.3 In the approach sector, away from the extended runway centre line, the allowable PFE for both standard 1 and standard 2 shall be permitted to increase linearly with angle up to plus or minus 40 degrees MLS azimuth angle where the permitted error is 1.5 times that on the extended runway centre line at the same distance. The allowable CMN shall not increase with angle. There shall be no degradation of either PFE or CMN with elevation angle.

3.5.3.2. Radio frequencies and polarization. The system shall operate with vertical polarization in the frequency band 960 MHz to 1 215 MHz. The interrogation and reply frequencies shall be assigned with 1MHz spacing between channels.

3.5.3.3. Channelling

3.5.3.3.1. DME operating channels shall be formed by pairing interrogation and reply frequencies and by pulse coding on the paired frequencies.

3.5.3.3.2. Pulse coding. DME/P channels shall have two different interrogation pulse codes as shown in the table in 3.5.4.4.1. One shall be used in the initial approach (IA) mode; the other shall be used in the final approach (FA) mode.

3.5.3.3.3. DME operating channels shall be chosen from table of 352 channels in which the channel numbers, frequencies, and pulse codes are assigned (AR-170).

3.5.3.3.4. Channel pairing. When a DME transponder is intended to operate in association with a single VHF navigation facility in the 108 MHz to 117.95 MHz frequency band and/or an MLS angle facility in the 5 031.0 MHz to 5 090.7 MHz frequency band, the DME operating channel shall be paired with the VHF channel.

Note: *There may be instances when a DME channel will be paired with both the ILS frequency and an MLS channel .*

3.5.3.4. Interrogation pulse repetition frequency

Note: *If the interrogator operates on more than one channel in one second, the following specifications apply to the sum of interrogations on all channels.*

3.5.3.4.1. DME/N. The interrogator average pulse repetition frequency (PRF) shall not exceed 30 pairs of pulses per second, based on the assumption that at least 95 per cent of the time is occupied for tracking.

3.5.3.4.2. *DME/N*. If it is desired to decrease the time of search, the PRF may be increased during search but shall not exceed 150 pairs of pulses per second.

3.5.3.4.3. *DME/N.* **Recommendation**.— *After 15 000 pairs of pulses have been transmitted without acquiring indication of distance, the PRF should not exceed 60 pairs of pulses per second thereafter, until a change in operating channel is made or successful search is completed*.

3.5.3.4.4. *DME/N.* When, after a time period of 30 seconds, tracking has not been established, the pulse pair repetition frequency shall not exceed 30 pulse pairs per second thereafter.

3.5.3.4.5. *DME/P.* The interrogator pulse repetition frequency shall not exceed the following number of pulse pairs per second:

A	search	40
B	aircraft on the ground	5
C	initial approach mode track	16
D	final approach mode track	40

Note 1: *A pulse repetition frequency (PRF) of 5 pulse pairs per second for aircraft on the ground may be exceeded if the aircraft requires accurate range information.*

Note 2: *It is intended that all PRF changes be achieved by automatic means.*

3.5.3.5. Aircraft handling capacity of the system

3.5.3.5.1. The aircraft handling capacity of transponders in an area shall be adequate for the peak traffic of the area or 100 aircraft, whichever is the lesser.

3.5.3.5.2. **Recommendation. —** *Where the peak traffic in an area exceeds 100 aircraft, the transponder should be capable of handling that peak traffic*.

Note: *Information on aircraft handling capacity will be found in GM on the application of the SARPs for radio navigation aids.*

3.5.3.6. Transponder identification

3.5.3.6.1. All transponders shall transmit an identification signal in one of the following forms as required by 3.5.3.6.5 below:

a) an “independent” identification consisting of coded (International Morse Code) identity pulses which can be used with all transponders;

b) an “associated” signal which can be used for transponders specifically associated with a VHF navigation or an MLS angle guidance facility which itself transmits an identification signal.

3.5.3.6.2. Both systems of identification shall use signals, which shall consist of the transmission for an appropriate period of a series of paired pulses transmitted at a repetition rate of 1 350 pulse pairs per second, and shall temporarily replace all reply pulses that would normally occur at that time except as in 3.5.3.6.2.2. These pulses shall have similar characteristics to the other pulses of the reply signals.

3.5.3.6.2.1 DME/N. Reply pulses shall be transmitted between key down times.

3.5.3.6.2.2 *DME/N.* **Recommendation.** — *If it is desired to preserve a constant duty cycle, an equalizing pair of pulses, having the same characteristics as the identification pulse pairs, should be transmitted 100 microseconds plus or minus 10 microseconds after each identity pair*.

3.5.3.6.2.3 DME/P. Reply pulses shall be transmitted between key down times.

3.5.3.6.2.4 For the DME/P transponder, reply pulse pairs to valid FA mode interrogations shall also be transmitted during key down times and have priority over identification pulse pairs.

3.5.3.6.2.5 The DME/P transponder shall not employ the equalizing pair of pulses of 3.5.3.6.2.2.

3.5.3.6.3. The characteristics of the “independent” identification signal shall be as follows:

a) the identity signal shall consist of the transmission of the beacon code in the form of dots and dashes (International Morse Code)

of identity pulses at least once every 40 seconds, at a rate of at least 6 words per minute; and

b) the identification code characteristic and letter rate for the DME transponder shall conform to the following to ensure that the maximum total key down time does not exceed 5 seconds per identification code group. The dots shall be a time duration of 0.1 second to 0.160 second. The dashes shall be typically 3 times the duration of the dots. The duration between dots and/or dashes shall be equal to that of one dot plus or minus 10 per cent. The time duration between letters or numerals shall not be less than three dots. The total period for transmission of an identification code group shall not exceed 10 seconds.

Note: *The tone identification signal is transmitted at a repetition rate of 1 350 pps. This frequency may be used directly in the airborne equipment as an aural output for the pilot, or other frequencies may be generated at the option of the interrogator designer (see 3.5.3.6.2).*

3.5.3.6.4. The characteristics of the "associated" signal shall be as follows:

a) when associated with a VHF or an MLS angle facility, the identification shall be transmitted in the form of dots and dashes (International Morse Code) as in 3.5.3.6.3 and shall be synchronized with the VHF facility identification code;

b) each 40-second interval shall be divided into four or more equal periods, with the transponder identification transmitted during one period only and the associated VHF and MLS angle facility identification, where these are provided, transmitted during the remaining periods;

c) for a DME transponder associated with an MLS, the identification shall be the last three letters of the MLS angle facility identification specified in 3.11.4.6.2.1.

3.5.3.6.5. Identification implementation

3.5.3.6.5.1 The "independent" identification code shall be employed wherever a transponder is not specifically associated with a VHF navigational facility or an MLS facility.

3.5.3.6.5.2 Wherever a transponder is specifically associated with a VHF navigational facility or an MLS facility, identification shall be provided by the "associated" code.

3.5.3.6.5.3 When voice communications are being radiated on an associated VHF navigational facility, an "associated" signal from the transponder shall not be suppressed.

3.5.3.7. DME/P mode transition

3.5.3.7.1. The DME/P interrogator for Standard 1 accuracy shall change from IA mode track to FA mode track at 13 km (7 NM) from the transponder when approaching the transponder, or any other situation when within 13 km (7 NM).

3.5.3.7.2. For Standard 1 accuracy, the transition from IA mode to FA mode track operation may be initiated within 14.8 km (8 NM) from the transponder. Outside 14.8 km (8 NM), the interrogator shall not interrogate in the FA mode.

Note: *Paragraph 3.5.3.7.1 does not apply if the transponder is a DME/N or if the DME/P transponder FA mode is inoperative.*

3.5.3.8. System efficiency. The DME/P system accuracy of 3.5.3.1.4 shall be achieved with a system efficiency of 50 per cent or more.

3.5.4. DETAILED TECHNICAL CHARACTERISTICS OF TRANSPONDER AND ASSOCIATED MONITOR

3.5.4.1. Transmitter

3.5.4.1.1. Frequency of operation. The transponder shall transmit on the reply frequency appropriate to the assigned DME channel (see 3.5.3.3.3).

3.5.4.1.2. Frequency stability. The radio frequency of operation shall not vary more than plus or minus 0.002 per cent from the assigned frequency.

3.5.4.1.3. Pulse shape and spectrum. The following shall apply to all radiated pulses:

a) Pulse rise time.

1) *DME/N.* Pulse rise time shall not exceed 3 microseconds.

2) *DME/P.* Pulse rise time shall not exceed 1.6 microseconds. For the FA mode, the pulse shall have a partial rise time of 0.25 plus or minus 0.05 microsecond. With respect to the FA mode and accuracy standard 1, the slope of the pulse in the partial rise time shall not vary by more than plus or minus 20 per cent. For accuracy standard 2, the slope shall not vary by more than plus or minus 10 per cent.

3) *DME/P*. **Recommendation**. **—** *Pulse rise time should not exceed 1.2 microseconds*.

b) Pulse duration shall be 3.5 microseconds plus or minus 0.5 microsecond.

c) Pulse decay time shall nominally be 2.5 microseconds but shall not exceed 3.5 microseconds.

d) The instantaneous amplitude of the pulse shall not, at any instant between the point of the leading edge which is 95 per cent of maximum amplitude and the point of the trailing edge which is 95 per cent of the maximum amplitude, fall below a value which is 95 per cent of the maximum voltage amplitude of the pulse.

e) For DME/N and DME/P: the spectrum of the pulse modulated signal shall be such that during the pulse the EIRP contained in a 0.5 MHz band centred on frequencies 0.8 MHz above and 0.8 MHz below the nominal channel frequency in each case shall not exceed 200 mW, and the EIRP contained in a 0.5 MHz band

centred on frequencies 2 MHz above and 2 MHz below the nominal channel frequency in each case shall not exceed 2 mW. The EIRP contained within any 0.5 MHz band shall decrease monotonically as the band centre frequency moves away from the nominal channel frequency.

Note: *Guidance material relating to the pulse spectrum measurement is provided in Document EUROCAE ED-57 (including Amendment No. 1).*

f) To ensure proper operation of the thresholding techniques, the instantaneous magnitude of any pulse turn-on transients which occur in time prior to the virtual origin shall be less than one per cent of the pulse peak amplitude. Initiation of the turn-on process shall not commence sooner than 1 microsecond prior to the virtual origin.

Note 1: *The time "during the pulse" encompasses the total interval from the beginning of pulse transmission to its end. For practical reasons, this interval may be measured between the 5 per cent points on the leading and trailing edges of the pulse envelope.*

Note 2: *The power contained in the frequency bands specified in 3.5.4.1.3 e) is the average power during the pulse. Average power in a given frequency band is the energy contained in this frequency band divided by the time of pulse transmission according to Note 1.*

3.5.4.1.4. Pulse spacing

3.5.4.1.4.1 The spacing of the constituent pulses of transmitted pulse pairs shall be as given in the table in 3.5.4.4.1.

3.5.4.1.4.2 DME/N. The tolerance on the pulse spacing shall be plus or minus 0.25 microsecond.

3.5.4.1.4.3 DME/N. **Recommendation.—** *The tolerance on the DME/N pulse spacing should be plus or minus 0.10 microsecond*.

3.5.4.1.4.4 DME/P. The tolerance on the pulse spacing shall be plus or minus 0.10 microsecond.

3.5.4.1.4.5 The pulse spacings shall be measured between the half voltage points on the leading edges of the pulses.

3.5.4.1.5. Peak power output

3.5.4.1.5.1 DME/N. ***Recommendation***.— The peak EIRP should not be less than that required to ensure a peak pulse power density of approximately minus 83 dBW/m^2 at the maximum specified service range and level.

3.5.4.1.5.2 DME/N. The peak equivalent isotropically radiated power shall not be less than that required to ensure a peak pulse power density of minus 89 dBW/m^2 under all operational weather conditions at any point within coverage specified in 3.5.3.1.2.

Note: *Although the Standard in 3.5.4.1.5.2 implies an improved interrogator receiver sensitivity, it is intended that the power density specified in 3.5.4.1.5.1 be available at the maximum specified service range and level.*

3.5.4.1.5.3 DME/P. The peak equivalent isotropically radiated power shall not be less than that required to ensure the following peak pulse power densities under all operational weather conditions:

a) minus 89 dBW/m^2 at any point within the coverage specified in 3.5.3.1.2 at ranges greater than 13 km (7 NM) from the transponder antenna;

b) minus 75 dBW/m^2 at any point within the coverage specified in 3.5.3.1.2 at ranges less than 13 km (7 NM) from the transponder antenna;

c) minus 70 dBW/m^2 at the MLS approach reference datum;

d) minus 79 dBW/m^2 at 2.5 m (8 ft) above the runway surface, at the MLS datum point, or at the farthest point on the runway centre line which is in line of sight of the DME transponder antenna.

Note: *Information material relating to the EIRP may be found in GM on the application of the SARPs for radio navigation aids, 7.2.1 and 7.3.8.*

3.5.4.1.5.4 The peak power of the constituent pulses of any pair of pulses shall not differ by more than 1 dB.

3.5.4.1.5.5 **Recommendation. —** *The reply capability of the transmitter should be such that the transponder should be capable of continuous operation at a transmission rate of 2 700 plus or minus 90 pulse pairs per second (if 100 aircraft are to be served)*.

Note: *Guidance on the relationship between number of aircraft and transmission rate is given in GM on the application of the SARPs for radio navigation aids, 7.1.5.*

3.5.4.1.5.6 The transmitter shall operate at a transmission rate, including randomly distributed pulse pairs and distance reply pulse pairs, of not less than 700 pulse pairs per second except during identity. The minimum transmission rate shall be as close as practicable to 700 pulse pairs per second. For DME/P, in no case shall it exceed 1 200 pulse pairs per second.

Note: *Operating DME transponders with quiescent transmission rates close to 700 pulse pairs per second will minimize the effects of pulse interference, particularly to other aviation services such as GNSS.*

3.5.4.1.6. Spurious radiation. During intervals between transmission of individual pulses, the spurious power received and measured in a receiver having the same characteristics as a transponder receiver, but tuned to any DME interrogation or reply frequency, shall be more than 50 dB below the peak pulse power received and measured in the same receiver tuned to the reply frequency in use during the transmission of the required pulses. This provision refers to all spurious transmissions, including modulator and electrical interference.

3.5.4.1.6.1 DME/N. The spurious power level specified in 3.5.4.1.6 shall be more than 80 dB below the peak pulse power level.

3.5.4.1.6.2 DME/P. The spurious power level specified in 3.5.4.1.6 shall be more than 80 dB below the peak pulse power level.

3.5.4.1.6.3 Out-of-band spurious radiation. At all frequencies from 10 to 1 800 MHz, but excluding the band of frequencies from 960 to 1 215 MHz, the spurious output of the DME transponder transmitter shall not exceed minus 40 dBm in any one kHz of receiver bandwidth.

3.5.4.1.6.4 The equivalent isotropically radiated power of any CW harmonic of the carrier frequency on any DME operating channel shall not exceed minus 10 dBm.

3.5.4.2. Receiver

3.5.4.2.1. Frequency of operation. The receiver centre frequency shall be the interrogation frequency appropriate to the assigned DME operating channel (see 3.5.3.3.3).

3.5.4.2.2. Frequency stability. The centre frequency of the receiver shall not vary more than plus or minus 0.002 per cent from the assigned frequency.

3.5.4.2.3. Transponder sensitivity

3.5.4.2.3.1 In the absence of all interrogation pulse pairs, with the exception of those necessary to perform the sensitivity measurement, interrogation pulse pairs with the correct spacing and nominal frequency shall trigger the transponder if the peak power density at the transponder antenna is at least:

a) minus 103 dBW/m^2 for DME/N with coverage range greater than 56 km (30 NM);

b) minus 93 dBW/m^2 for DME/N with coverage range not greater than 56 km (30 NM);

c) minus 86 dBW/m^2 for DME/P IA mode;

d) minus 75 dBW/m^2 for DME/P FA mode.

3.5.4.2.3.2 The minimum power densities specified in 3.5.4.2.3.1 shall cause the transponder to reply with an efficiency of at least:

a) 70 per cent for DME/N;

b) 70 per cent for DME/P IA mode;

c) 80 per cent for DME/P FA mode.

3.5.4.2.3.3 DME/N dynamic range. The performance of the transponder shall be maintained when the power density of the interrogation signal at the transponder antenna has any value between the minimum specified in 3.5.4.2.3.1 up to a maximum of minus 22 dBW/m^2 when installed with ILS or MLS and minus 35 dBW/m^2 when installed for other applications.

3.5.4.2.3.4 DME/P dynamic range. The performance of the transponder shall be maintained when the power density of the interrogation

signal at the transponder antenna has any value between the minimum specified in 3.5.4.2.3.1 up to a maximum of minus 22 dBW/m^2.

3.5.4.2.3.5 The transponder sensitivity level shall not vary by more than 1 dB for transponder loadings between 0 and 90 per cent of its maximum transmission rate.

3.5.4.2.3.6 DME/N. When the spacing of an interrogator pulse pair varies from the nominal value by up to plus or minus 1 microsecond, the receiver sensitivity shall not be reduced by more than 1 dB.

3.5.4.2.3.7 DME/P. When the spacing of an interrogator pulse pair varies from the nominal value by up to plus or minus 1 microsecond, the receiver sensitivity shall not be reduced by more than 1 dB.

3.5.4.2.4. Load limiting

3.5.4.2.4.1 DME/N. **Recommendation. —** *When transponder loading exceeds 90 per cent of the maximum transmission rate, the receiver sensitivity should be automatically reduced in order to limit the transponder replies, so as to ensure that the maximum permissible transmission rate is not exceeded. (The available range of sensitivity reduction should be at least 50 dB.)*

3.5.4.2.4.2 DME/P. To prevent transponder overloading the transponder shall automatically limit its replies, so as to ensure that the maximum transmission rate is not exceeded. If the receiver sensitivity reduction is implemented to meet this requirement, it shall be applied to the IA mode only and shall not affect the FA mode.

3.5.4.2.5. Noise. When the receiver is interrogated at the power densities specified in 3.5.4.2.3.1 to produce a transmission rate equal to 90 per cent of the maximum, the noise generated pulse pairs shall not exceed 5 per cent of the maximum transmission rate.

3.5.4.2.6. Bandwidth

3.5.4.2.6.1 The minimum permissible bandwidth of the receiver shall be such that the transponder sensitivity level shall not deteriorate by more than 3 dB when the total receiver drift is added to an incoming interrogation frequency drift of plus or minus 100 kHz.

3.5.4.2.6.2 DME/N. The receiver bandwidth shall be sufficient to allow compliance with 3.5.3.1.3 when the input signals are those specified in 3.5.5.1.3.

3.5.4.2.6.3 DME/P — IA mode. The receiver bandwidth shall be sufficient to allow compliance with 3.5.3.1.3 when the input signals are those specified in 3.5.5.1.3. The 12 dB bandwidth shall not exceed 2 MHz and the 60 dB bandwidth shall not exceed 10 MHz.

3.5.4.2.6.4 DME/P — FA mode. The receiver bandwidth shall be sufficient to allow compliance with 3.5.3.1.3 when the input signals are those specified in 3.5.5.1.3. The 12 dB bandwidth shall not

exceed 6 MHz and the 60 dB bandwidth shall not exceed 20 MHz.

3.5.4.2.6.5 Signals greater than 900 kHz removed from the desired channel nominal frequency and having power densities up to the values specified in 3.5.4.2.3.3 for DME/N and 3.5.4.2.3.4 for DME/P shall not trigger the transponder. Signals arriving at the intermediate frequency shall be suppressed at least 80 dB. All other spurious response or signals within the 960 MHz to 1 215 MHz band and image frequencies shall be suppressed at least 75 dB.

3.5.4.2.7. *Recovery time.* Within 8 microseconds of the reception of a signal between 0 dB and 60 dB above minimum sensitivity level, the minimum sensitivity level of the transponder to a desired signal shall be within 3 dB of the value obtained in the absence of signals. This requirement shall be met with echo suppression circuits, if any, rendered inoperative. The 8 microseconds are to be measured between the half voltage points on the leading edges of the two signals, both of which conform in shape, with the specifications in 3.5.5.1.3.

3.5.4.2.8. *Spurious radiations.* Radiation from any part of the receiver or allied circuits shall meet the requirements stated in 3.5.4.1.6.

3.5.4.2.9. CW and echo suppression

Recommendation. — *CW and echo suppression should be adequate for the sites at which the transponders will be used*.

Note: *In this connection, echoes mean undesired signals caused by multipath transmission (reflections, etc.).*

3.5.4.2.10. Protection against interference

3.5.4.2.10.1. **Recommendation.—** *Protection against interference outside the DME frequency band should be adequate for the sites at which the transponders will be used*.

3.5.4.3. Decoding

3.5.4.3.1. The transponder shall include a decoding circuit such that the transponder can be triggered only by pairs of received pulses having pulse duration and pulse spacings appropriate to interrogator signals as described in 3.5.5.1.3 and 3.5.5.1.4.

3.5.4.3.2. The decoding circuit performance shall not be affected by signals arriving before, between, or after, the constituent pulses of a pair of the correct spacing.

3.5.4.3.3. *DME/N — Decoder rejection.* An interrogation pulse pair with a spacing of plus or minus 2 microseconds, or more, from the nominal value and with any signal level up to the value specified in 3.5.4.2.3.3 shall be rejected such that the transmission rate does not exceed the value obtained when interrogations are absent.

3.5.4.3.4. DME/P — Decoder rejection. An interrogation pulse pair with a spacing of plus or minus 2 microseconds, or more, from the nominal value and with any signal level up to the value specified in 3.5.4.2.3.4 shall be rejected such that the transmission rate does not exceed the value obtained when interrogations are absent.

3.5.4.4. Time delay

3.5.4.4.1. When a DME is associated only with a VHF facility, the time delay shall be the interval from the half voltage point on the leading edge of the second constituent pulse of the interrogation pair and the half voltage point on the leading edge of the second constituent pulse of the reply transmission. This delay shall be consistent with the following table, when it is desired that aircraft interrogators are to indicate distance from the transponder site.

		Pulse pair spacing (μs)		Time delay (μs)	
Channel suffix	**Operating mode**	**Interrogation**	**Reply**	**1st pulse timing**	**2nd pulse timing**
X	DME/N	12	12	50	50
	DME/P IA M	12	12	50	–
	DME/P FA M	18	12	56	–
Y	DME/N	36	30	56	50
	DME/P IA M	36	30	56	–
	DME/P FA M	42	30	62	–
W	DME/N	–	–	–	–
	DME/P IA M	24	24	50	–
	DME/P FA M	30	24	56	–
Z	DME/N	–	–	–	–
	DME/P IA M	21	15	56	–
	DME/P FA M	27	15	62	

Note 1: *W and X are multiplexed on the same frequency.*

Note 2: *Z and Y are multiplexed on the same frequency.*

3.5.4.4.2. When a DME is associated with an MLS angle facility, the time delay shall be the interval from the half voltage point on the leading edge of the first constituent pulse of the interrogation pair and the half voltage point on the leading edge of the first constituent pulse of the reply transmission. This delay shall be 50 microseconds for mode X channels and 56 microseconds for mode Y channels, when it is desired that aircraft interrogators are to indicate distance from the transponder site.

3.5.4.4.2.1 For DME/P transponders, no time delay adjustment shall be permitted.

3.5.4.4.3. **Recommendation. —** *For the DME/N the transponder time delay should be capable of being set to an appropriate value between the nominal value of the time delay minus 15 microseconds and the nominal value of the time delay, to permit aircraft interrogators to indicate zero distance at a specific point remote from the transponder site*.

Note: *Modes not allowing for the full 15 microseconds rang of adjustment in transponder time delay may only be adjustable to the limits given by the transponder circuit delay and recovery time.*

3.5.4.4.3.1 DME/N. The time delay shall be the interval from the half voltage point on the leading edge of the first constituent pulse of the interrogation pair and the half voltage point on the leading edge of the first constituent pulse of the reply transmission.

3.5.4.4.3.2 DME/P — IA mode. The time delay shall be the interval from the half voltage point on the leading edge of the first constituent pulse of the interrogation pulse pair to the half voltage point on the leading edge of the first constituent pulse of the reply pulse pair.

3.5.4.4.3.3 DME/P — FA mode. The time delay shall be the interval from the virtual origin of the first constituent pulse of the interrogation pulse pair to the virtual origin of the first constituent pulse of the reply pulse pair. The time of arrival measurement points shall be within the partial rise time of the first constituent pulse of the pulse pair in each case.

3.5.4.4.4. DME/N. **Recommendation. —** *Transponders should be sited as near to the point at which zero indication is required as is practicable*.

Note 1: *It is desirable that the radius of the sphere at the surface of which zero indication is given be kept as small as possible in order to keep the zone of ambiguity to a minimum.*

Note 2: *Information material on siting DME with MLS is provided in 7.1.6 of GM on the application of the SARPs for Iradio navigation aids.This guidance material sets forth, in particular, appropriate steps to be taken to prevent different zero range indication if DME/P associated with MLS and DME/N associated with ILS serve the same runway.*

3.5.4.5. Accuracy

3.5.4.5.1. DME/N. The transponder shall not contribute more than plus or minus 1 microsecond (150 m (500 ft)) to the overall system error.

3.5.4.5.1.1 DME/N. **Recommendation**. — *The contribution to the total system error due to the combination of the transponder errors, transponder location coordinate errors, propagation effects and random pulse interference effects should be not greater than plus or minus 340 m (0.183 NM) plus 1.25 per cent of distance measure*.

Note: *This error contribution limit includes errors from all causes except the airborne equipment, and assumes that the airborne equipment measures time delay based on the first constituent pulse of a pulse pair.*

3.5.4.5.1.2 DME/N. The combination of the transponder errors, transponder location coordinate errors, propagation effects and random pulse interference effects shall not contribute more than plus or minus 185 m (0.1 NM) to the overall system error.

Note: *This error contribution limit includes errors from all causes except the airborne equipment, and assumes that the airborne equipment measures time delay based on the first constituent pulse of a pulse pair.*

3.5.4.5.2. DME/N. A transponder associated with a landing aid shall not contribute more than plus or minus 0.5 microsecond (75 m (250 ft)) to the over-all system error.

3.5.4.5.3. DME/P — FA mode

3.5.4.5.3.1 Accuracy standard 1. The transponder shall not contribute more than plus or minus 10 m (plus or minus 33 ft) PFE and plus or minus 8 m (plus or minus 26 ft) CMN to the over-all system error.

3.5.4.5.3.2 Accuracy standard 2. The transponder shall not contribute more than plus or minus 5 m (plus or minus 16 ft) PFE and plus or minus 5 m (plus or minus 16 ft) CMN to the overall system error.

3.5.4.5.4. DME/P — IA mode. The transponder shall not contribute more than plus or minus 15 m (plus or minus 50 ft) PFE and plus or minus 10 m (plus or minus 33 ft) CMN to the overall system error.

3.5.4.5.5. **Recommendation. —** *When a DME is associated with an MLS angle facility, the above accuracy should include the error introduced by the first pulse detection due to the pulse spacing tolerances*.

3.5.4.6. Efficiency

3.5.4.6.1. The transponder reply efficiency shall be at least 70 per cent for DME/N and DME/P (IA mode) and 80 per cent for DME/P (FA mode) at all values of transponder loading up to the loading corresponding to 3.5.3.5 above and at the minimum sensitivity level specified in 3.5.4.2.3.1 and 3.5.4.2.3.5.

Note: *When considering the transponder reply efficiency value, account is to be taken of the DME dead time and of the loading introduced by the monitoring function.*

3.5.4.6.2. Transponder dead time. The transponder shall be rendered inoperative for a period normally not to exceed 60 microseconds after a valid interrogation decode has occurred. In extreme cases when the geographical site of the transponder is such as to produce undesirable reflection problems, the dead time may be increased but only by the minimum amount necessary to allow the suppression of echoes for DME/N and DME/P IA mode.

3.5.4.6.2.1 In DME/P the IA mode dead time shall not blank the FA mode channel and vice versa.

3.5.4.7. Monitoring and control

3.5.4.7.1. Means shall be provided at each transponder site for the automatic monitoring and control of the transponder in use.

3.5.4.7.2. DME/N monitoring action

3.5.4.7.2.1 In the event that any of the conditions specified in 3.5.4.7.2.2 occur, the monitor shall cause the following action to take place:

a) a suitable indication shall be given at a control point;

b) the operating transponder shall be automatically switched off; and

c) the standby transponder, if provided, shall be automatically placed in operation.

3.5.4.7.2.2 The monitor shall cause the actions specified in 3.5.4.7.2.1 if:

a) the transponder delay differs from the assigned value by 1 microsecond (150 m (500 ft)) or more;

b) in the case of a DME/N associated with a landing aid, the transponder delay differs from the assigned value by 0.5 microsecond (75 m (250 ft)) or more.

3.5.4.7.2.3 **Recommendation. —** *The monitor should cause the actions specified in 3.5.4.7.2.1 if the spacing between the first and second pulse of the transponder pulse pair differs from the nominal value specified in the table following 3.5.4.4.1 by 1 microsecond or more*.

3.5.4.7.2.4 **Recommendation. —** *The monitor should also cause a suitable indication to be given at a control point if any of the following conditions arise*:

a) a fall of 3 dB or more in transponder transmitted power output;

b) a fall of 6 dB or more in the minimum transponder receiver sensitivity (provided that this is not due to the action of the receiver automatic gain reduction circuits);

c) the spacing between the first and second pulse of the transponder reply pulse pair differs from the normal value specified in 3.5.4.1.4 by 1 microsecond or more;

d) variation of the transponder receiver and transmitter frequencies beyond the control range of the reference circuits (if the operating frequencies are not directly crystal controlled).

3.5.4.7.2.5 Means shall be provided so that any of the conditions and malfunctioning enumerated in 3.5.4.7.2.2, 3.5.4.7.2.3 and 3.5.4.7.2.4 which are monitored can persist for a certain period before the monitor takes action. This period shall be as low as practicable, but shall not exceed 10 seconds, consistent with the need for avoiding interruption, due to transient effects, of the service provided by the transponder.

3.5.4.7.2.6 The transponder shall not be triggered more than 120 times per second for either monitoring or automatic frequency control purposes, or both.

3.5.4.7.3. DME/P monitoring action

3.5.4.7.3.1 The monitor system shall cause the transponder radiation to cease and provide a warning at a control point if any of the following conditions persist for longer than the period specified:

a) there is a change in transponder PFE that exceeds the limits specified in either 3.5.4.5.3 or 3.5.4.5.4 for more than one second. If the FA mode limit is exceeded, but the IA mode limit is maintained, the IA mode may remain operative;

b) there is a reduction in the EIRP to less than that necessary to satisfy the requirements specified in 3.5.4.1.5.3 for a period of more than one second;

c) there is a reduction of 3 dB or more in the transponder sensitivity necessary to satisfy the requirements specified in 3.5.4.2.3 for a period of more than five seconds in FA mode and ten seconds in IA mode (provided that this is not due to the action of the receiver automatic sensitivity reduction circuits);

d) the spacing between the first and second pulse of the transponder reply pulse pair differs from the value specified in the table in 3.5.4.4.1 by 0.25 microsecond or more for a period of more than one second.

3.5.4.7.3.2 **Recommendation. —** *The monitor should cause a suitable indication to be given at a control point if there is an increase above 0.3 microseconds or a decrease below 0.2 microseconds of the reply pulse partial rise time which persists for more than one second*.

3.5.4.7.3.3 The period during which erroneous guidance information is radiated shall not exceed the periods specified in 3.5.4.7.3.1. Attempts to clear a fault by resetting the primary ground equipment or by switching to standby ground equipment, if fitted, shall be completed within this time. If the fault is not cleared within the time allowed, the radiation shall cease. After shutdown, no attempt shall be made to restore service until a period of 20 seconds has elapsed.

3.5.4.7.3.4 The transponder shall not be triggered for monitoring purposes more than 120 times per second in the IA mode and 150 times per second in the FA mode.

3.5.4.7.3.5 DME/N and DME/P monitor failure. Failure of any part of the monitor itself shall automatically produce the same results as the malfunctioning of the element being monitored.

3.5.5. TECHNICAL CHARACTERISTICS OF INTERROGATOR

Note: *The following subparagraphs specify only those interrogator parameters which must be defined to ensure that the interrogator:*

a) does not jeopardize the effective operation of the DME system, e.g. by increasing transponder loading abnormally; and

b) is capable of giving accurate distance readings.

3.5.5.1. Transmitter

3.5.5.1.1. Frequency of operation. The interrogator shall transmit on the interrogation frequency appropriate to the assigned DME channel (see 3.5.3.3.3).

Note: *This specification does not preclude the use of airborne interrogators having less than the total number of operating channels.*

3.5.5.1.2. Frequency stability. The radio frequency of operation shall not vary more than plus or minus 100 kHz from the assigned value.

3.5.5.1.3. Pulse shape and spectrum. The following shall apply to all radiated pulses:

a) Pulse rise time.

1) *DME/N.* Pulse rise time shall not exceed 3 microseconds.

2) *DME/P.* Pulse rise time shall not exceed 1.6 microseconds. For the FA mode, the pulse shall have a partial rise time of 0.25 plus or minus 0.05 microsecond. With respect to the FA mode and accuracy standard 1, the slope of the pulse in the partial rise time shall not vary by more than plus or minus 20 per cent. For accuracy standard 2 the slope shall not vary by more than plus or minus 10 per cent.

3) *DME/P.* **Recommendation.—** *Pulse rise time should not exceed 1.2 microseconds.*

b) Pulse duration shall be 3.5 microseconds plus or minus 0.5 microsecond.

c) Pulse decay time shall nominally be 2.5 microseconds, but shall not exceed 3.5 microseconds.

d) The instantaneous amplitude of the pulse shall not, at any instant between the point of the leading edge which is 95 per cent of maximum amplitude and the point of the trailing edge which is 95 per cent of the maximum amplitude, fall below a value which is 95 per cent of the maximum voltage amplitude of the pulse.

e) The spectrum of the pulse modulated signal shall be such that at least 90 per cent of the energy in each pulse shall be within 0.5 MHz in a band centred on the nominal channel frequency.

f) To ensure proper operation of the thresholding techniques, the instantaneous magnitude of any pulse turn-on transients which occur in time prior to the virtual origin shall be less than one per cent of the pulse peak amplitude. Initiation of the turn-on process

shall not commence sooner than 1 microsecond prior to the virtual origin.

Note 1: *The lower limit of pulse rise time (see 3.5.5.1.3 a)) and decay time (see 3.5.5.1.3 c)) are governed by the spectrum requirements in 3.5.5.1.3 e).*

Note 2: *While 3.5.5.1.3 e) calls for a practically attainable spectrum, it is desirable to strive for the following spectrum control characteristics: the spectrum of the pulse modulated signal is such that the power contained in a 0.5 MHz band centred on frequencies 0.8 MHz above and 0.8 MHz below the nominal channel frequency is, in each case, at least 23 dB below the power contained in a 0.5 MHz band centred on the nominal channel frequency. The power contained in a 0.5 MHz band centred on frequencies 2 MHz above and 2 MHz below the nominal channel frequency is, in each case, at least 38 dB below the power contained in a 0.5 MHz band centred on the nominal channel frequency. Any additional lobe of the spectrum is of less amplitude than the adjacent lobe nearer the nominal channel frequency.*

3.5.5.1.4. Pulse spacing

3.5.5.1.4.1 The spacing of the constituent pulses of transmitted pulse pairs shall be as given in the table in 3.5.4.4.1.

3.5.5.1.4.2 DME/N. The tolerance on the pulse spacing shall be plus or minus 0.5 microsecond.

3.5.5.1.4.3 DME/N. **Recommendation.** — *The tolerance on the pulse spacing should be plus or minus 0.25 microsecond*.

3.5.5.1.4.4 DME/P. The tolerance on the pulse spacing shall be plus or minus 0.25 microsecond.

3.5.5.1.4.5 The pulse spacing shall be measured between the half voltage points on the leading edges of the pulses.

3.5.5.1.5. Pulse repetition frequency

3.5.5.1.5.1 The pulse repetition frequency shall be as specified in 3.5.3.4.

3.5.5.1.5.2 The variation in time between successive pairs of interrogation pulses shall be sufficient to prevent false lock-on.

3.5.5.1.5.3 DME/P. In order to achieve the system accuracy specified in 3.5.3.1.4 above, the variation in time between successive pairs of interrogation pulses shall be sufficiently random to decorrelate high frequency multipath errors.

Note: *Information on DME/P multipath effects is given in GM on the application of the SARPs for radio navigation aids, 7.3.7.*

3.5.5.1.6. Spurious radiation. During intervals between transmission of individual pulses, the spurious pulse power received and measured in a receiver having the same characteristics of a DME transponder receiver, but tuned to any DME interrogation or reply frequency, shall be more than 50 dB below the peak pulse power received and measured in the same receiver tuned to the interrogation frequency in use during the transmission of the required pulses. This provision shall apply to all spurious pulse transmissions. The spurious CW power radiated from the interrogator on any DME interrogation or reply frequency shall not exceed 20 microwatts (minus 47 dBW).

Note: *Although spurious CW radiation between pulses is limited to levels not exceeding minus 47 dBW, States are cautioned that where DME interrogators and secondary surveillance radar transponders are employed in the same aircraft, it may be necessary to provide protection to airborne SSR in the band 1 015 MHz to 1 045 MHz. This protection may be provided by limiting conducted and radiated CW to a level of the order of minus 77 dBW. Where his level cannot be achieved, the required degree of protection may be provided in planning the relative location of the SSR and DME aircraft antennas. It is to be noted that only a few of these frequencies are utilized in the VHF/DME pairing plan.*

3.5.5.1.7. **Recommendation. —** *The spurious pulse power received and measured under the conditions stated in 3.5.5.1.6 above should be 80 dB below the required peak pulse power received*.

Note: *Reference 3.5.5.1.6 and 3.5.5.1.7 — although limitation of spurious CW radiation between pulses to levels not exceeding 80 dB below the peak pulse power received is recommended, States are cautioned that where users employ airborne secondary surveillance radar transponders in the same aircraft, it may be necessary to limit direct and radiated CW to not more than 0.02 microwatt in the frequency band 1 015 MHz to 1 045 MHz. It is to be noted that only a few of these frequencies are utilized in the VHF/DME pairing plan.*

3.5.5.1.8. DME/P. The peak EIRP shall not be less than that required to ensure the power densities in 3.5.4.2.3.1 under all operational weather conditions.

3.5.5.2. Time delay

3.5.5.2.1. The time delay shall be consistent with the table in 3.5.4.4.1.

3.5.5.2.2. DME/N. The time delay shall be the interval between the time of the half voltage point on the leading edge of the second constituent interrogation pulse and the time at which the distance circuits reach the condition corresponding to zero distance indication.

3.5.5.2.3. DME/N. The time delay shall be the interval between the time of the half voltage point on the leading edge of the first constituent interrogation pulse and the time at which the distance circuits reach the condition corresponding to zero distance indication.

3.5.5.2.4. DME/P — IA mode. The time delay shall be the interval between the time of the half voltage point on the leading edge of the first constituent interrogation pulse and the time at which the distance circuits reach the condition corresponding to zero distance indication.

3.5.5.2.5. DME/P — FA mode. The time delay shall be the interval between the virtual origin of the leading edge of the first constituent interrogation pulse and the time at which the distance circuits reach the condition corresponding to zero distance indication. The time of arrival shall be measured within the partial rise time of the pulse.

3.5.5.3. Receiver

3.5.5.3.1. Frequency of operation. The receiver centre frequency shall be the transponder frequency appropriate to the assigned DME operating channel (see 3.5.3.3.3).

3.5.5.3.2. Receiver sensitivity

3.5.5.3.2.1 DME/N. The airborne equipment sensitivity shall be sufficient to acquire and provide distance information to the accuracy specified in 3.5.5.4 for the signal power density specified in 3.5.4.1.5.2.

Note: *Although the Standard in 3.5.5.3.2.1 is for DME/N interrogators, the receiver sensitivity is better than that necessary in order to operate with the power density of DME/N transponders given in 3.5.4.1.5.1 in order to assure interoperability with the IA mode of DME/P transponders.*

3.5.5.3.2.2 DME/P. The airborne equipment sensitivity shall be sufficient to acquire and provide distance information to the accuracy specified in 3.5.5.4.2 and 3.5.5.4.3 for the signal power densities specified in 3.5.4.1.5.3.

3.5.5.3.2.3 DME/N. The performance of the interrogator shall be maintained when the power density of the transponder signal at the interrogator antenna is between the minimum values given in 3.5.4.1.5 and a maximum of minus 18 dBW/m^2.

3.5.5.3.2.4 DME/P. The performance of the interrogator shall be maintained when the power density of the transponder signal at the interrogator antenna is between the minimum values given in 3.5.4.1.5 and a maximum of minus 18 dBW/m^2.

3.5.5.3.3. Bandwidth

3.5.5.3.3.1 DME/N. The receiver bandwidth shall be sufficient to allow compliance with 3.5.3.1.3, when the input signals are those specified in 3.5.4.1.3.

3.5.5.3.3.2 DME/P — IA mode. The receiver bandwidth shall be sufficient to allow compliance with 3.5.3.1.3 when the input signals are those specified in 3.5.4.1.3. The 12-dB bandwidth shall not exceed 2 MHz and the 60-dB bandwidth shall not exceed 10 MHz.

3.5.5.3.3.3 DME/P — FA mode. The receiver bandwidth shall be sufficient to allow compliance with 3.5.3.1.3 when the input signals are those specified in 3.5.5.1.3. The 12-dB bandwidth shall not exceed 6 MHz and the 60-dB bandwidth shall not exceed 20 MHz.

3.5.5.3.4. Interference rejection

3.5.5.3.4.1 When there is a ratio of desired to undesired co-channel DME signals of at least 8 dB at the input terminals of the airborne receiver, the interrogator shall display distance information and provide unambiguous identification from the stronger signal.

Note: *Co-channel refers to those reply signals that utilize the same frequency and the same pulse pair spacing.*

3.5.5.3.4.2 DME/N. DME signals greater than 900 kHz removed from the desired channel nominal frequency and having amplitudes up to 42 dB above the threshold sensitivity shall be rejected.

3.5.5.3.4.3 DME/P. DME signals greater than 900 kHz removed from the desired channel nominal frequency and having amplitudes up to 42 dB above the threshold sensitivity shall be rejected.

3.5.5.3.5. Decoding

3.5.5.3.5.1 The interrogator shall include a decoding circuit such that the receiver can be triggered only by pairs of received pulses having pulse duration and pulse spacings appropriate to transponder signals as described in 3.5.4.1.4.

3.5.5.3.5.2 DME/N — Decoder rejection. A reply pulse pair with a spacing of plus or minus 2 microseconds, or more, from the nominal value and with any signal level up to 42 dB above the receiver sensitivity shall be rejected.

3.5.5.3.5.3 DME/P — Decoder rejection. A reply pulse pair with a spacing of plus or minus 2 microseconds, or more, from the nominal value and with any signal level up to 42 dB above the receiver sensitivity shall be rejected.

3.5.5.4. Accuracy

3.5.5.4.1. DME/N. The interrogator shall not contribute more than plus or minus 315 m (plus or minus 0.17 NM) or 0.25 per cent of indicated range, whichever is greater, to the overall system error.

3.5.5.4.2. DME/P — IA mode. The interrogator shall not contribute more than plus or minus 30 m (plus or minus 100 ft) to the overall system PFE and not more than plus or minus 15 m (plus or minus 50 ft) to the overall system CMN.

3.5.5.4.3. DME/P — FA mode

3.5.5.4.3.1 Accuracy standard 1. The interrogator shall not contribute more than plus or minus 15 m (plus or minus 50 ft) to the overall system PFE and not more than plus or minus 10 m (plus or minus 33 ft) to the overall system CMN.

3.5.5.4.3.2 Accuracy standard 2. The interrogator shall not contribute more than plus or minus 7 m (plus or minus 23 ft) to the overall system PFE and not more than plus or minus 7 m (plus or minus 23 ft) to the overall system CMN.

Note: *Information on filters to assist in achieving this accuracy is given in GM on the application of the SARPs for radio navigation aids, 7.3.4.*

3.5.5.4.4. DME/P. The interrogator shall achieve the accuracy specified in 3.5.3.1.3.4 with a system efficiency of 50 per cent or more.

Note: *Information on system efficiency is given in GM on the application of the SARPs for radio navigation aids, 7.1.1.*

3.6. SPECIFICATION FOR EN-ROUTE VHF MARKER BEACONS (75 MHZ)

3.6.1. EQUIPMENT

3.6.1.1. *Frequencies.* The emissions of an en-route VHF marker beacon shall have a radio frequency of 75 MHz plus or minus 0.005 per cent.

3.6.1.2. Characteristics of emissions

3.6.1.2.1. Radio marker beacons shall radiate an uninterrupted carrier modulated to a depth of not less than 95 per cent or more than 100 per cent. The total harmonic content of the modulation shall not exceed 15 per cent.

3.6.1.2.2. The frequency of the modulating tone shall be 3 000 Hz plus or minus 75 Hz.

3.6.1.2.3. The radiation shall be horizontally polarized.

3.6.1.2.4. *Identification.* If a coded identification is required at a radio marker beacon, the modulating tone shall be keyed so as to transmit dots or dashes or both in an appropriate sequence. The mode of keying shall be such as to provide a dot-and-dash duration together with spacing intervals corresponding to transmission at a rate equivalent to approximately six to ten words per minute. The carrier shall not be interrupted during identification.

3.6.1.2.5. Coverage and radiation pattern.

Note: *The coverage and radiation pattern of marker beacons will ordinarily be established by Contracting States on the basis of operational requirements, taking into account recommendations of regional meetings.*

The most desirable radiation pattern would be one that:

a) in the case of fan marker beacons, results in lamp operation only when the aircraft is within a rectangular parallelepiped, symmetrical about the vertical line through the marker beacon and with the major and minor axes adjusted in accordance with the flight path served;
b) in the case of a Z marker beacon, results in lamp operation only when the aircraft is within a cylinder, the axis of which is the vertical line through the marker beacons.

In practice, the production of such patterns is impracticable and a compromise radiation pattern is necessary.

Such designs and any new designs providing a closer approximation to the most desirable radiation pattern outlined above will normally meet operational requirements.

3.6.1.2.6. *Determination of coverage*. The limits of coverage of marker beacons shall be determined on the basis of the field strength specified in 3.1.7.3.2.

3.6.1.2.7. *Radiation pattern.* **Recommendation.—** *The radiation pattern of a marker beacon normally should be such that the polar axis is vertical, and the field strength in the pattern is symmetrical about the polar axis in the plane or planes containing the flight paths for which the marker beacon is intended.*

Note: *Difficulty in siting certain marker beacons may make it necessary to accept a polar axis that is not vertical.*

3.6.1.3. Monitoring. **Recommendation.—** For each marker beacon, suitable monitoring equipment should be provided which will show at an appropriate location:

a) *a decrease in radiated carrier power below 50 per cent of normal;*
b) *a decrease of modulation depth below 70 per cent;*
c) a failure of keying.

3.7. REQUIREMENTS FOR THE GLOBAL NAVIGATION SATELLITE SYSTEM (GNSS)

3.7.1. DEFINITIONS

Aircraft-based augmentation system (ABAS). An augmentation system that augments and/or integrates the information obtained from the other GNSS elements with information available on board the aircraft.

Alert. An indication provided to other aircraft systems or annunciation to the pilot to identify that an operating parameter of a navigation system is out of tolerance.

Alert limit. For a given parameter measurement, the error tolerance not to be exceeded without issuing an alert.

Antenna port. A point where the received signal power is specified. For an active antenna, the antenna port is a fictitious point between the antenna elements and the antenna pre-amplifier. For a passive antenna, the antenna port is the output of the antenna itself.

Axial ratio. The ratio, expressed in decibels, between the maximum output power and the minimum output power of an antenna to an incident linearly polarized wave as the polarization orientation is varied over all directions perpendicular to the direction of propagation.

Channel of standard accuracy (CSA). The specified level of positioning, velocity and timing accuracy that is available to any GLONASS user on a continuous, worldwide basis.

Core satellite constellation(s). The core satellite constellations are GPS and GLONASS.

Global navigation satellite system (GLONASS). The satellite navigation system operated by the Russian Federation.

Global navigation satellite system (GNSS). A worldwide position and time determination system that includes one or more satellite constellations, aircraft receivers and system integrity monitoring, augmented as necessary to support the required navigation performance for the intended operation.

Global positioning system (GPS). The satellite navigation system operated by the United States.

GNSS position error. The difference between the true position and the position determined by the GNSS receiver.

Ground-based augmentation system (GBAS). An augmentation system in which the user receives augmentation information directly from a ground-based transmitter.

Ground-based regional augmentation system (GRAS). An augmentation system in which the user receives augmentation information directly from one of a group of ground-based transmitters covering a region.

Integrity. A measure of the trust that can be placed in the correctness of the information supplied by the total system. Integrity includes the ability of a system to provide timely and valid warnings to the user (alerts).

Pseudo-range. The difference between the time of transmission by a satellite and reception by a GNSS receiver multiplied by the speed of light in a vacuum, including bias due to the difference between a GNSS receiver and satellite time reference.

Satellite-based augmentation system (SBAS). A wide coverage augmentation system in which the user receives augmentation information from a satellite-based transmitter.

Standard positioning service (SPS). The specified level of positioning, velocity and timing accuracy that is available to any global positioning system (GPS) user on a continuous, worldwide basis.

Time-to-alert. The maximum allowable time elapsed from the onset of the navigation system being out of tolerance until the equipment enunciates the alert.

3.7.2. GENERAL

3.7.2.1. Functions

3.7.2.1.1. The GNSS shall provide position and time data to the aircraft.

Note: *These data are derived from pseudo-range measurements between an aircraft equipped with a GNSS receiver and various signal sources on satellites or on the ground.*

3.7.2.2. *GNSS* elements

3.7.2.2.1. The GNSS navigation service shall be provided using various combinations of the following elements installed on the ground, on satellites and/or on board the aircraft:

a) Global Positioning System (GPS) that provides the Standard Positioning Service (SPS) as defined in 3.7.3.1;

b) Global Navigation Satellite System (GLONASS) that provides the Channel of Standard Accuracy (CSA) navigation signal as defined in 3.7.3.2;

c) aircraft-based augmentation system (ABAS) as defined in 3.7.3.3;

d) satellite-based augmentation system (SBAS) as defined in 3.7.3.4;

e) ground-based augmentation system (GBAS) as defined in 3.7.3.5;

f) ground-based regional augmentation system (GRAS) as defined in 3.7.3.5; and

g) aircraft GNSS receiver as defined in 3.7.3.6.

3.7.2.3. Space and time reference

3.7.2.3.1. *Space reference*. The position information provided by the GNSS to the user shall be expressed in terms ofthe World Geodetic System — 1984 (WGS-84) geodetic reference datum.

Note 1: *SARPs for WGS-84 are contained in Annex 4, Chapter 2, Annex 11, Chapter 2, Annex 14, Volumes I and II, Chapter 2 and Annex 15, Chapter 3.*

Note 2: *If GNSS elements using other than WGS-84 coordinates are employed, appropriate conversion parameters are to be applied.*

3.7.2.3.2. *Time reference*. The time data provided by the GNSS to the user shall be expressed in a time scale that takes the Coordinated Universal Time (UTC) as reference.

3.7.2.4. Signal-in-space performance

3.7.2.4.1. The combination of GNSS elements and a fault-free GNSS user receiver shall meet the signal-in-space requirements defined in Table 3.7.2.4-1 (located at the end of section 3.7).

Note 1: *The concept of a fault-free user receiver is applied only as a means of defining the performance of combinations of different GNSS elements. The fault-free receiver is assumed to be a receiver with nominal accuracy and time-to-alert performance. Such a receiver is assumed to have no failures that affect the integrity, availability and continuity performance.*

Note 2: *For GBAS approach service intended to support approach and landing operations using Category III minima, performance requirements are defined that apply in addition to the signal-in-space requirements defined in Table 3.7.2.4-1..*

3.7.3. GNSS ELEMENTS SPECIFICATIONS

3.7.3.1. GPS Standard Positioning Service (SPS) (L1)

3.7.3.1.1. Space and control segment accuracy

3.7.3.1.1.1 *Positioning accuracy*. The GPS SPS position errors shall not exceed the following limits::

	Global average 95% of the time	**Worst site 95 % of the time**
Horizontal position error	9 m (30 ft)	17 m (56 ft)
Vertical position error	15 m (49 ft)	37 m (121 ft)

3.7.3.1.1.2 Time *transfer* accuracy. The GPS SPS time transfer errors shall not exceed 40 nanoseconds 95 per cent of the time.

3.7.3.1.1.3 Range domain accuracy. The range domain error shall not exceed the following limits:

a) range error of any satellite — 30 m (100 ft) with reliability specified in 3.7.3.1.3:

b) 95th percentile range rate error of any satellite — 0.006 m (0.02 ft) per second (global average);

c) 95th percentile range acceleration error of any satellite — 0.002 m (0.006 ft) per second-squared (global average); and

d) 95th percentile range error for any satellites over all time differences between time of data generation and time of use of data — 7.8 m (26 ft) (global average).

3.7.3.1.2. Availability. The GPS SPS availability shall be as follows:

- ≥99 per cent horizontal service availability, average location (17 m 95 per cent threshold)
- ≥99 per cent vertical service availability, average location (37 m 95 per cent threshold)
- ≥90 per cent horizontal service availability, worst-case location (17 m 95 per cent threshold)
- ≥90 per cent vertical service availability, worst-case location (37 m 95 per cent threshold)

3.7.3.1.3. Reliability. The GPS SPS reliability shall be within the following limits:

a) reliability — at least 99.94 per cent (global average); and

b) reliability — at least 99.79 per cent (worst single point average).

3.7.3.1.4. Probability of major service failure. The probability that the user range error (URE) of any satellite will exceed 4.42 times the upper bound onthe user range accuracy (URA) broadcast by that satellite without an alert received at the user receiver antenna within 10 seconds shall not exceed 1×10^{-5} per hour.

Note: *The different alert indications are described in United States Department of Defence, Global Positioning System – Standard Positioning Service – Performance Standard, 4th Edition, September 2008, Section 2.3.4.*

3.7.3.1.5. Continuity. The probability of losing GPS SPS signal-in-space (SIS) availability from a slot of the nominal 24-slot constellation due to unscheduled interruption shall not exceed 2×10^{-4} per hour.

3.7.3.1.6. Coverage. The GPS SPS shall cover the surface of the earth up to an altitude of 3 000 kilometres.

Note: *Guidance material on GPS accuracy, availability, reliability and coverage is given in GM on application GNSS standards and recommended practices, 4.1.*

3.7.3.1.7. Radio frequency (RF) characteristics

Note: *Detailed RF characteristics are specified in Appendix, 3.1.1.1.*

3.7.3.1.7.1 Carrier frequency. Each GPS satellite shall broadcast an SPS signal at the carrier frequency of 1 575.42 MHz (GPS L1) using code division multiple access (CDMA).

Note: *A new civil frequency will be added to the GPS satellites and will be offered by the United States for critical safety-of-life applications. SARPs for this signal may be developed at a later date.*

3.7.3.1.7.2 Signal spectrum. The GPS SPS signal power shall be contained within a ±12 MHz band (1 563.42 – 1 587.42 MHz) centred on the L1 frequency.

3.7.3.1.7.3 Polarization. The transmitted RF signal shall be right-hand (clockwise) circularly polarized.

3.7.3.1.7.4 Signal power level. Each GPS satellite shall broadcast SPS navigation signals with sufficient power such that, at all unobstructed locations near the ground from which the satellite is observed at an elevation angle of 5 degrees or higher, the level of the received RF signal at the antenna port of a 3 dBi linearly-polarized antenna is within the range of –158.5 dBW to –153 dBW for all antenna orientations orthogonal to the direction of propagation.

3.7.3.1.7.5 Modulation. The SPS L1 signal shall be bipolar phase shift key (BPSK) modulated with a pseudo random noise (PRN) 1.023 MHz coarse/acquisition (C/A) code. The C/A code sequence shall be repeated each millisecond. The transmitted PRN code sequence shall be the Modulo-2 addition of a 50 bits per second navigation message and the C/A code.

3.7.3.1.8. GPS time. GPS time shall be referenced to UTC.

3.7.3.1.9. Coordinate system. The GPS coordinate system shall be WGS-84.

3.7.3.1.10. Navigation information. The navigation data transmitted by the satellites shall include the necessary information to determine:

a) satellite time of transmission;

b) satellite position;

c) satellite health;

d) satellite clock correction;

e) propagation delay effects;

f) time transfer to UTC; and

g) constellation status.

3.7.3.2. GLONASS Channel of Standard Accuracy (CSA) (L1)

Note: *In this section, the term GLONASS refers to all satellites in the constellation. Standards relating only to GLONASS-M satellites are qualified accordingly.*

3.7.3.2.1. Space and control segment accuracy

3.7.3.2.1.1 Positioning accuracy. The GLONASS CSA position errors shall not exceed the following limits:

	Global average 95% of the time	**Worst site 95 % of the time**
Horizontal position error	5 m (17 ft)	12 m (40 ft)
Vertical position error	9 m (29 ft)	25 m (97 ft)

3.7.3.2.1.2 Time transfer accuracy. The GLONASS CSA time transfer errors shall not exceed 700 nanoseconds 95 per cent of the time.

3.7.3.2.1.3 Range domain accuracy. The range domain error shall not exceed the following limits:

a) range error of any satellite — 18 m (59.7 ft);

b) range rate error of any satellite — 0.02 m (0.07 ft) per second;

c) range acceleration error of any satellite — 0.007 m (0.023 ft) per second squared;

d) root-mean-square range error over all satellites — 6 m (19.9 ft).

3.7.3.2.2. Availability. The GLONASS CSA availability shall be as follows:

a) ≥99 per cent horizontal service availability, average location (12 m, 95 per cent threshold);

b) ≥99 per cent vertical service availability, average location (25 m, 95 per cent threshold);

c) ≥90 per cent horizontal service availability, worst-case location (12 m, 95 per cent threshold);

d) ≥90 per cent vertical service availability, worst-case location (25 m, 95 per cent threshold).

3.7.3.2.3. Reliability. The GLONASS CSA reliability shall be within the following limits:

a) frequency of a major service failure — not more than three per year for the constellation (global average); and

b) reliability — at least 99.7 per cent (global average).

3.7.3.2.4. Coverage. The GLONASS CSA shall cover the surface of the earth up to an altitude of 2 000 km.

Note: *Information on GLONASS accuracy, availability, reliability and coverage is given in GM on application GNSS standards and recommended practices, 4.2.*

3.7.3.2.5. RF characteristics

Note: *Detailed RF characteristics are specified in Appendix, 3.2.1.1.*

3.7.3.2.5.1. Carrier *frequency.* Each GLONASS satellite shall broadcast CSA navigation signal at its own carrier frequency in the L1 (1.6 GHz) frequency band using frequency division multiple access (FDMA).

Note 1: *GLONASS satellites may have the same carrier frequency but in this case they are located in antipodal slots of the same orbital plane.*

Note 2: *GLONASS-M satellites will broadcast an additional ranging code at carrier frequencies in the L2 (1.2 GHz) frequency band using FDMA.*

3.7.3.2.5.2. Signal spectrum. GLONASS CSA signal power shall be contained within a ±5.75 MHz band centred on each GLONASS carrier frequency.

3.7.3.2.5.3. Polarization. The transmitted RF signal shall be right-hand circularly polarized.

3.7.3.2.5.4. Signal power level. Each GLONASS satellite shall broadcast CSA navigation signals with sufficient power such that, at all unobstructed locations near the ground from which the satellite is observed at an elevation angle of 5 degrees or higher, the level of the received RF signal at the antenna port of a 3dBi linearly polarized antenna is within the range of -161 dBW to -155.2 dBW for all antenna orientations orthogonal to the direction of propagation.

Note 1: *The power limit of 155.2 dBW is based on the predetermined characteristics of a user antenna, atmospheric losses of 0.5 dB and an error of an angular position of a satellite that does not exceed one degree (in the direction causing the signal level to increase).*

Note 2: *GLONASS-M satellites will also broadcast a ranging code on L2 with sufficient power such that, at all unobstructed locations near the ground from which the satellite is observed at an elevation angle of 5 degrees or higher, the level of the received RF signal at the antenna port of a 3 dBi linearly polarized antenna is not less then –167 dBW for all antenna orientations orthogonal to the direction of propagation.*

3.7.3.2.5.5. Modulation

3.7.3.2.5.5.1 Each GLONASS satellite shall transmit at its carrier frequency the navigation RF signal using a BPSK-modulated binary train. The phase shift keying of the carrier shall be performed at π-radians with the maximum error ±0.2 radian. The pseudo-random code sequence shall be repeated each millisecond.

3.7.3.2.5.5.2 The modulating navigation signal shall be generated by the Modulo-2 addition of the following three binary signals:

a) ranging code transmitted at 511 kbits/s;

b) navigation message transmitted at 50 bits/s; and

c) 100 Hz auxiliary meander sequence.

3.7.3.2.6. GLONASS time. GLONASS time shall be referenced to UTC(SU) (as maintained by the National Time Service of Russia).

3.7.3.2.7. Coordinate system. The GLONASS coordinate system shall be PZ-90.

Note: *Conversion from the PZ-90 coordinate system used by GLONASS to the WGS-84 coordinates is defined in Appendix, 3.2.5.2.*

3.7.3.2.8. Navigation information. The navigation data transmitted by the satellite shall include the necessary information to determine:

a) satellite time of transmission;

b) satellite position;

c) satellite health;

d) satellite clock correction;

e) time transfer to UTC; and

f) constellation status.

Note: *Structure and contents of data are specified in Appendix, 3.2.1.2 and 3.2.1.3, respectively.*

3.7.3.3. Aircraft-based augmentation system (ABAS)

3.7.3.3.1. Performance. The ABAS function combined with one or more of the other GNSS elements and both a fault-free GNSS receiver and fault-free aircraft system used for the ABAS function shall meet the requirements for accuracy, integrity, continuity and availability as stated in 3.7.2.4.

3.7.3.4. Satellite-based augmentation system (SBAS)

3.7.3.4.1. Performance. SBAS combined with one or more of the other GNSS elements and a fault-free receiver shall meet the requirements for system accuracy, integrity, continuity and availability for the intended operation as stated in 3.7.2.4, throughout the corresponding service area (see 3.7.3.4.3).

Note: *SBAS complements the core satellite constellation(s) by increasing accuracy, integrity, continuity and availability of navigation provided within a service area, typically including multiple aerodromes.*

3.7.3.4.1.1 SBAS combined with one or more of the other GNSS elements and a fault-free receiver shall meet the requirements for signal-in-space integrity as stated in 3.7.2.4, throughout the SBAS coverage area.

Note: *Message Types 27 or 28 can be used to comply with the integrity requirements in the coverage area.*

3.7.3.4.2 Functions. SBAS shall perform one or more of the following functions:

a) ranging: provide an additional pseudo-range signal with an accuracy indicator from an SBAS satellite;

b) GNSS satellite status: determine and transmit the GNSS satellite health status (Appendix , 3.5.7.3);

c) basic differential correction: provide GNSS satellite ephemeris and clock corrections (fast and long-term) to be applied to the pseudo-range measurements from satellites (Appendix , 3.5.7.4); and

d) precise differential correction: determine and transmit the ionospheric corrections (Appendix , 3.5.7.5).

Note: *If all the functions are provided, SBAS in combination with core satellite constellation(s) can support departure, en-route, terminal and approach operations including Category I precision approach. The level of performance that can be achieved depends upon the infrastructure incorporated into SBAS and the ionospheric conditions in the geographic area of interest.*

3.7.3.4.2.1 Ranging

3.7.3.4.2.1.1 Excluding atmospheric effects, the range error for the ranging signal from SBAS satellites shall not exceed 25 m (82 ft) (95 per cent).

3.7.3.4.2.1.2 The probability that the range error exceeds 150 m (490 ft) in any hour shall not exceed 10^{-5}.

3.7.3.4.2.1.3 The probability of unscheduled outages of the ranging function from an SBAS satellite in any hour shall not exceed 10^{-3}.

3.7.3.4.2.1.4 The range rate error shall not exceed 2 m (6.6 ft) per second.

3.7.3.4.2.1.5 The range acceleration error shall not exceed 0.019 m (0.06 ft) per second-squared.

3.7.3.4.3. Service area. An SBAS service area for any approved type of operation shall be a declared area within the SBAS coverage area where SBAS meets the corresponding requirements of 3.7.2.4.

Note 1: *An SBAS system can have different service areas corresponding to different types of operation (e.g. APV-I, Category I, etc.).*

Note 2: *The coverage area is that area within which the SBAS broadcast can be received (i.e. the geostationary satellite footprints).*

Note 3: *SBAS coverage and service areas are discussed in GM*

3.7.3.4.4. RF characteristics

Note: *Detailed RF characteristics are specified in Appendix.*

3.7.3.4.4.1 Carrier frequency. The carrier frequency shall be 1 575.42 MHz.

Note: *After 2005, when the upper GLONASS frequencies are vacated, another type of SBAS may be introduced using some of these frequencies.*

3.7.3.4.4.2 Signal spectrum. At least 95 per cent of the broadcast power shall be contained within a ±12 MHz band centred on the L1 frequency. The bandwidth of the signal transmitted by an SBAS satellite shall be at least 2.2 MHz.

3.7.3.4.4.3 SBAS satellite signal *power level*

3.7.3.4.4.3.1 Each SBAS satellite placed in orbit before 1 January 2014 shall broadcast navigation signals with sufficient power such that, at all unobstructed locations near the ground from which the satellite is observed at an elevation angle of 5 degrees or higher, the level of the received RF signal at the antenna port of a 3 dBi linearly polarized antenna is within the range of –161 dBW to –153 dBW for all antenna orientations orthogonal to the direction of propagation.

3.7.3.4.4.3.2 Each SBAS satellite placed in orbit after 31 December 2013 shall comply with the following requirements:

a) The satellite shall broadcast navigation signals with sufficient power such that, at all unobstructed locations near the ground from which the satellite is observed at or above the minimum elevation angle for which a trackable GEO signal needs to be provided, the level of the received RF signal at the antenna port of the antenna specified in Appendix, Table 88, is at least –164.0 dBW.

b) The minimum elevation angle used to determine GEO coverage shall not be less than 5 degrees for a user near the ground.

c) The level of a received SBAS RF signal at the antenna port of a 0 dBic antenna located near the ground shall not exceed –152.5 dBW.

d) The ellipticity of the broadcast signal shall be no worse than 2 dB for the ang range of ±9.1° from boresight.

3.7.3.4.4.4 Polarization. The broadcast signal shall be right-hand circularly polarized.

3.7.3.4.4.5 Modulation. The transmitted sequence shall be the Modulo-2 addition of the navigation message at a rate of 500 symbols per

second and the 1 023 bit pseudo-random noise code. It shall then be BPSK-modulated onto the carrier at a rate of 1.023 megachips per second.

3.7.3.4.5. *SBAS network time (SNT)*. The difference between SNT and GPS time shall not exceed 50 nanoseconds.

3.7.3.4.6. *Navigation information*. The navigation data transmitted by the satellites shall include the necessary information to determine:

a) SBAS satellite time of transmission;

b) SBAS satellite position;

c) corrected satellite time for all satellites;

d) corrected satellite position for all satellites;

e) ionospheric propagation delay effects;

f) user position integrity;

g) time transfer to UTC; and

h) service level status.

3.7.3.5. Ground-based augmentation system (GBAS) and ground-based regional augmentation system (GRAS)

Note: *Except where specifically annotated, GBAS Standards and Recommended Practices apply to GBAS and GRAS.*

3.7.3.5.1. *Performance*. GBAS combined with one or more of the other GNSS elements and a fault-free GNSS receiver shall meet the requirements for system accuracy, continuity, availability and integrity for the intended operation as stated in 3.7.2.4 within the service volume for the service used to support the operation as defined in 3.7.3.5.3.

Note: *GBAS is intended to support all types of approach, landing, guided take-off, departure and surface operations and may support en-route and terminal operations. GRAS is intended to support en-route, terminal, non-precision approach, departure, and approach with vertical guidance. The following SARPs are developed to support all categories of precision approach, approach with vertical guidance, and a GBAS positioning service.*

3.7.3.5.2. *Functions*. GBAS shall perform the following functions:

a) provide locally relevant pseudo-range corrections;

b) provide GBAS-related data;

c) provide final approach segment data when supporting precision approach;

d) provide predicted ranging source availability data; and

e) provide integrity monitoring for GNSS ranging sources.

3.7.3.5.3. Service volume

3.7.3.5.3.1 General requirement for approach services. The minimum GBAS approach service volume shall be as follows, except where topographical features dictate and operational requirements permit:

a) laterally, beginning at 140 m (450 ft) each side of the landing threshold point/fictitious threshold point (LTP/FTP) and projecting out ±35 degrees either side of the final approach path to 28 km (15 NM) and ±10 degrees either side of the final approach path to 37 km (20 NM); and

b) vertically, within the lateral region, up to the greater of 7 degrees or 1.75 promulgated glide path angle (GPA) above the horizontal with an origin at the glide path interception point (GPIP) to an upper bound of 3 000 m (10 000 ft) height above threshold (HAT) and 0.45 GPA above the horizontal or to such lower angle, down to 0.30 GPA, as required, to safeguard the promulgated glide path intercept procedure. The lower bound is half the lowest decision height supported or 3.7 m (12 ft), whichever is larger.

Note 1: *LTP/FTP and GPIP are defined in Appendix , 3.6.4.5.1.*

Note 2*: Information concerning the approach service volume is provided in GM.*

3.7.3.5.3.2. Approach services supporting autoland and guided take-off. The minimum additional GBAS service volume to support approach operations that include automatic landing and roll-out, including during guided take-off, shall be as follows, except where operational requirements permit:

a) Horizontally, within a sector spanning the width of the runway beginning at the stop end of the runway and extending parallel with the runway centre line towards the LTP to join the minimum service volume as described in 3.7.3.5.3.1.

b) Vertically, between two horizontal surfaces one at 3.7 m (12 ft) and the other at 30 m (100 ft) above the runway centre line to join the minimum service volume as described in 3.7.3.5.3.1.

3.7.3.5.3.3 GBAS positioning service. The service volume for the GBAS positioning service shall be where the data broadcast can be received and the positioning service meets the requirements of 3.7.2.4 and supports the corresponding approved operations.

3.7.3.5.4. Data broadcast characteristics

3.7.3.5.4.1 Carrier frequency. The data broadcast radio frequencies used shall be selected from the radio frequencies in the band 108 to 117.975 MHz. The lowest assignable frequency shall be 108.025 MHz and the highest assignable frequency shall be 117.950 MHz. The separation between assignable frequencies (channel spacing) shall be 25 kHz.

Note 1: *Guidance material on VOR/GBAS frequency assignments and geographical separation criteria is given in GM*

Note 2: I*LS/GBAS geographical separation criteria and geographical separation criteria for GBAS and VHF communication services operating in the 118 – 137 MHz band are under development. Until these criteria are defined and included in SARPs, it is intended that frequencies in the band 112.050 – 117.900 MHz will be used.*

3.7.3.5.4.2 Access technique. A time division multiple access (TDMA) technique shall be used with a fixed frame structure. The data broadcast shall be assigned one to eight slots.

Note: *Two slots is the nominal assignment. Some GBAS facilities that use multiple VHF data broadcast (VDB) transmit antennas to improve VDB coverage may require assignment of more than two time slots.*

3.7.3.5.4.3 Modulation. GBAS data shall be transmitted as 3-bit symbols, modulating the data broadcast carrier by D8PSK, at a rate of 10 500 symbols per second.

3.7.3.5.4.4 Data broadcast RF field strength and polarization.

Note 1: *GBAS can provide a VHF data broadcast with either horizontal (GBAS/H) or elliptical (GBAS/E) polarization that employs both horizontal polarization (HPOL) and vertical polarization (VPOL) components. Aircraft using a VPOL component will not be able to conduct operations with GBAS/H equipment. Relevant guidance material is provided in GM.*

Note 2: *The minimum and maximum field strengths are consistent with a minimum distance of 80 m (263 ft) from the transmitter antenna for a range of 43 km (23 NM).*

Note 3: *When supporting approach services at airports with challenging VDB transmitter siting constraints, it is acceptable to adjust the service volume when operational requirements permit (as stated in the service volume definition sections 3.7.3.5.3.1 and 3.7.3.5.3.2). Such adjustments of the service volume may be operationally acceptable when they have no impact on the GBAS service outside a radius of 80 m (263 ft) from the VDB antenna, assuming a nominal effective isotropically radiated power of 47dBm (GM).*

3.7.3.5.4.4.1 GBAS/H

3.7.3.5.4.4.1.1 A horizontally polarized signal shall be broadcast.

3.7.3.5.4.4.1.2 The effective isotropically radiated power (EIRP) shall provide for a horizontally polarized signal with a minimum field strength of 215 microvolts per metre (–99 dBW/m^2) and a maximum field strength of 0.879 volts per metre (–27 dBW/m^2) within the GBAS service volume as specified in 3.7.3.5.3.1. The field strength shall be measured as an average over the period of the synchronization and ambiguity resolution field of the burst. Within the additional GBAS service volume, as specified in 3.7.3.5.3.2, the effective isotropically radiated power (EIRP) shall provide for a horizontally polarized signal with a minimum field strength of 215 microvolts per metre (–99 dBW/m^2) below 36 ft and down to 12 ft above the runway surface and 650

microvolts per metre (–89.5 dBW/m^2) at 36 ft or more above the runway surface.

Note: *Guidance material concerning the approach service volume is provided in GM, 7.3.*

3.7.3.5.4.4.2 GBAS/E

3.7.3.5.4.4.2.1 **Recommendation.—** *An elliptically polarized signal should be broadcast whenever practical*.

3.7.3.5.4.4.2.2 When an elliptically polarized signal is broadcast, the horizontally polarized component shall meet the requirements in 3.7.3.5.4.4.1.2, and the effective isotropically radiated power (EIRP) shall provide for a vertically polarized signal with a minimum field strength of 136 microvolts per metre (–103 dBW/m^2) and a maximum field strength of 0.555 volts per metre (–31 dBW/m^2) within the GBAS service volume. The field strength shall be measured as an average over the period of the synchronization and ambiguity resolution field of the burst.

3.7.3.5.4.5 Power transmitted in adjacent channels. The amount of power during transmission under all operating conditions when measured over a 25 kHz bandwidth centred on the ith adjacent channel shall not exceed the values shown in Table 3.7.3.5-1 (located at the end of section 3.7).

3.7.3.5.4.6 Unwanted emissions. Unwanted emissions, including spurious and out-of-band emissions, shall be compliant with the levels shown in Table 3.7.3.5-2 (located at the end of section 3.7). The total power in any VDB harmonic or discrete signal shall not be greater than –53 dBm.

3.7.3.5.5. Navigation information. The navigation data transmitted by GBAS shall include the following information:

a) pseudo-range corrections, reference time and integrity data;

b) GBAS-related data;

c) final approach segment data when supporting precision approach; and

d) predicted ranging source availability data.

Note: *Structure and contents of data are specified in Appendix, 3.6.3.*

3.7.3.6. Aircraft GNSS receiver

3.7.3.6.1. The aircraft GNSS receiver shall process the signals of those GNSS elements that it intends to use as specified in Appendix , 3.1 (for GPS), Appendix, 3.2 (for GLONASS), Appendix , 3.3 (for combined GPS and GLONASS), Appendix, 3.5 (for SBAS) and Appendix, 3.6 (for GBAS and GRAS).

3.7.4. RESISTANCE TO INTERFERENCE

3.7.3.7. GNSS shall comply with performance requirements defined in 3.7.2.4 and Appendix, 3.7 in the presence of the interference environment defined in Appendix, 3.7.

Note: *GPS and GLONASS operating in the frequency band 1 559 – 1 610 MHz are classified by the ITU as providing a radio navigation satellite service (RNSS) and aeronautical radio navigation service (ARNS) and are afforded special spectrum protection status for RNSS. In order to achieve the performance objectives for precision approach guidance to be supported by the GNSS and its augmentations, RNSS/ARNS is intended to remain the only global allocation in the 1 559 –1 610 MHz band and emissions from systems in this and adjacent frequency bands are intended to be tightly controlled by national and/or international regulation.*

3.7.5. DATABASE

3.7.5.1. Aircraft GNSS equipment that uses a database shall provide a means to:

a) update the electronic navigation database; and

b) determine the Aeronautical Information Regulation and Control (AIRAC) effective dates of the aeronautical database.

Table 3.7.2.4-1 Signal-in-space performance requirements

Typical operation	Accuracy horizontal 95% (Notes 1 and 3)	Accuracy vertical 95% (Notes 1 and 3)	Integrity (Note 2)	Time-to-alert (Note 3)	Continuity (Note 4)	Availability (Note 5)
En-route	3.7 km (2.0 NM)	N/A	$1 - 1 \times 10^{-7}$/h	5 min	$1 - 1 \times 10^{-4}$/h to $1 - 1 \times 10^{-8}$/h	0.99 to 0.99999
En-route, Terminal	0.74 km (0.4 NM)	N/A	$1 - 1 \times 10^{-7}$/h	15 s	$1 - 1 \times 10^{-4}$/h to $1 - 1 \times 10^{-8}$/h	0.99 to 0.99999
Initial approach, Intermediate approach Non-precision approach (NPA), Departure	220 m (720 ft)	N/A	$1 - 1 \times 10^{-7}$/h	10 s	$1 - 1 \times 10^{-4}$/h to $1 - 1 \times 10^{-8}$/h	0.99 to 0.99999
Approach operations with vertical guidance (APV-I)	16.0 m (52 ft)	20 m (66 ft)	$1 - 2 \times 10^{-7}$ in any approach	10 s	$1 - 8 \times 10^{-6}$ per 15 s	0.99 to 0.99999
Approach operations with vertical guidance (APV-II)	16.0 m (52 ft)	8.0 m (26 ft)	$1 - 2 \times 10^{-7}$ in any approach	6 s	$1 - 8 \times 10^{-6}$ per 15 s	0.99 to 0.99999
Category I precision approach (Note 7)	16.0 m (52 ft)	6.0 m to 4.0 m (20 ft to 13 ft) (Note 6)	$1 - 2 \times 10^{-7}$ in any approach	6 s	$1 - 8 \times 10^{-6}$ per 15 s	0.99 to 0.99999

NOTES:

1. *The 95th percentile values for GNSS position errors are those required for the intended operation at the lowest height above threshold (HAT), if applicable. Detailed requirements are specified in*

Appendix and guidance material is given in GM on application GNSS standards and recommended practices, 3.2.

2. *The definition of the integrity requirement includes an alert limit against which the requirement can be assessed. For Category 1 precision approach, a vertical alert limit (VAL) greater than 10 m for a specific system design may only be used if a system-specific safety analysis has been completed. Further guidance on the alert limits is provided in Atachement D, 3.3.6 to 3.3.10. These alert limits are:*

Typical operation	Horizontal alert limit	Vertical alert limit
En-route (oceanic/continental low density)	7.4 km (4 NM)	N/A
En-route (continental)	3.7 km (2 NM)	N/A
En-route, Terminal	1.85 km (1 NM)	N/A
NPA	556 m (0.3 NM)	N/A
APV-I	40 m (130 ft)	50 m (164 ft)
APV-II	40.0 m (130 ft)	20.0 m (66 ft)
Category I precision approach	40.0 m (130 ft)	35.0 m to 10.0 m (115 ft to 33 ft)

3. *The accuracy and time-to-alert requirements include the nominal performance of a fault-free receiver.*

4. *Ranges of values are given for the continuity requirement for en-route, terminal initial approach, NPA and departure operations, as this requirement is dependent upon several factors including the intended operation, traffic density, complexity of airspace and availability of alternative navigation aids. The lower value given is the minimum requirement for areas with low traffic density and airspace complexity. The higher value given is appropriate for areas with high traffic density and airspace complexity. Continuity requirements for APV and Category I operations apply to the average risk (over time) of loss of service, normalized to a 15-second exposure time .*

5. *A range of values is given for the availability requirements as these requirements are dependent upon the operational need which is based upon several factors including the frequency of operations, weather environments, the size and duration of the outages, availability for which a system is considered to be practical but are not adequate to replace non-GNSS navigation aids. For en-route navigation, the higher values given are adequate for GNSS to be the only navigation aid provided in an area. For approach and departure, the higher values given are based upon the availability requirements at airports with a large amount of traffic assuming that operations to or from multiple runways are affected but reversionary operational procedures ensure the safety of the operation.*

6. *A range of values is specified for Category I precision approach. The 4.0 m (13 feet) requirement is based upon ILS specifications and represents a conservative derivation from these specifications.*

7. *GNSS performance requirements for Category II and III precision approach operations are under review and will be included at a later date.*

8. *The terms APV-I and APV-II refer to two levels of GNSS approach and landing operations with vertical guidance (APV) and these terms are not necessarily intended to be used operationally.*

Table 3.7.3.5-1. GBAS broadcast power transmitted in adjacent channels

Channel	Relative power	Maximum power
1st adjacent	–40 dBc	12 dBm
2nd adjacent	–65 dBc	–13 dBm
4th adjacent	–74 dBc	–22 dBm
8th adjacent	–88.5 dBc	–36.5 dBm
16th adjacent	–101.5 dBc	–49.5 dBm
21nd adjacent	–105 dBc	–53 dBm
64th adjacent	–113 dBc	–61 dBm
76th adjacent and beyond	–115 dBc	–63 dBm

NOTES:

1. The maximum power applies if the authorized transmitter power exceeds 150 W.

2. The relationship is linear between single adjacent points designated by the adjacent channels identified above.

Table 3.7.3.5-2. GBAS broadcast unwanted emissions

Frequency	Relative unwanted emission level (Note 2)	Maximum unwanted emission level (Note 1)
9 kHz to 150 kHz	–93 dBc (Note 3)	–55 dBm/1 kHz (Note 3)
150 kHz to 30 MHz	–103 dBc (Note 3)	–55 dBm/10 kHz (Note 3)
30 MHz to 106.125 MHz	–115 dBc	–57 dBm/100 kHz
106.425 MHz	–113 dBc	–55 dBm/100 kHz
107.225 MHz	–105 dBc	–47 dBm/100 kHz
107.625 MHz	–101.5 dBc	–53.5 dBm/10 kHz
107.825 MHz	–88.5 dBc	–40 dBm/10 kHz
107.925 MHz	–74 dBc	–36 dBm/1 kHz
107.9625 MHz	–71 dBc	–33 dBm/1 kHz
107.975 MHz	–65 dBc	–27 dBm/1 kHz
118.000 MHz	–65 dBc	–27 dBm/1 kHz
118.0125 MHz	–71 dBc	–33 dBm/1 kHz
118.050 MHz	–74 dBc	–36 dBm/1 kHz
118.150 MHz	–88.5 dBc	–40.5 dBm/10 kHz
118.350 MHz	–101.5 dBc	–53.5 dBm/10 kHz
118.750 MHz	–105 dBc	–47 dBm/100 kHz
119.550 MHz	–113 dBc	–55 dBm/100 kHz
119.850 MHz to 1 GHz	–115 dBc	–57 dBm/100 kHz
1 GHz to 1.7 GHz	–115 dBc	–47 dBm/1 MHz

NOTES:

1. The maximum unwanted emission level (absolute power) applies if the unauthorized transmitter power exceeds 150 W.

2. The relative unwanted emission level is to be computed using the same bandwidth for desired and unwanted signals. This may require conversion of the measurement for unwanted signals done using the bandwidth indicated in the maximum unwanted emission level column of this table.

3. This value is driven by measurement limitations. Actual performance is expected to be better.

4. The relationship is linear between single adjacent points designated by the adjacent channels identified above.

3.8. (RESERVED)

3.9. SYSTEM CHARACTERISTICS OF AIRBORNE ADF RECEIVING SYSTEMS

3.9.1. ACCURACY OF BEARING INDICATION

3.9.1.1. The bearing given by the ADF system shall not be in error by more than plus or minus 5 degrees with a radio signal from any direction having a field strength of 70 microvolts per metre or more radiated from an LF/MF NDB or locator operating within the tolerances permitted by this Annex and in the presence also of an unwanted signal from a direction 90 degrees from the wanted signal and:

a) on the same frequency and 15 dB weaker; or

b) plus or minus 2 kHz away and 4 dB weaker; or

c) plus or minus 6 kHz or more away and 55 dB stronger.

Note: *The above bearing error is exclusive of aircraft magnetic compass error.*

3.10. (RESERVED)

Table. Channeling and preparing of DME/VOR and DME/ILS (Reserved)

INTENTIONALLY LEFT BLANK

APPENDIX: TECHNICAL SPECIFICATIONS FOR THE GLOBAL NAVIGATION SATELLITE SYSTEM (GNSS)

1. DEFINITIONS

GBAS/E. A ground-based augmentation system transmitting an elliptically-polarized VHF data broadcast.

GBAS/H. A ground-based augmentation system transmitting a horizontally-polarized VHF data broadcast.

Receiver. A subsystem that receives GNSS signals and includes one or more sensors.

Reserved (bits/words/fields). Bits/words/fields that are not allocated, but which are reserved for a particular GNSS application.

Smax. Maximum desired VHF data broadcast signal power at the VHF data broadcast receiver input. This power at the receiver input is computed from the maximum RF field strength defined in Chapter 3, 3.7.3.5.4.4 for the desired VHF data broadcast signal as received by an ideal isotropic antenna minus the minimum aircraft implementation loss. It is used to determine the VHF data broadcast interference immunity to adjacent channel signals (3.6.8.2.2.6) and to signals from sources outside the 108.000 – 117.975 MHz band (3.6.8.2.2.8).

Spare (bits/words/fields). Bits/words/fields that are not allocated or reserved, and which are available for future allocation.

Note: *All spare bits are set to zero.*

2. GENERAL

Note: *The following technical specifications supplement the provisions of Chapter 3, 3.7.*

3. GNSS ELEMENTS

3.1 GLOBAL POSITIONING SYSTEM (GPS) STANDARD POSITIONING SERVICE (SPS) (L1)

3.1.1 NON-AIRCRAFT ELEMENTS

3.1.1.1 Radio frequency (RF) characteristics

3.1.1.1.1 *Carrier phase noise.* The carrier phase noise spectral density of the unmodulated carrier shall be such that a phase locked loop of 10 Hz one-sided noise bandwidth is able to track the carrier to an accuracy of 0.1 radian (1 sigma).

3.1.1.1.2 *Spurious emissions.* In-band spurious emissions shall be at least 40 dB below the unmodulated L1 carrier over the allocated channel bandwidth.

3.1.1.1.3 *Correlation loss.* The loss in the recovered signal power due to imperfections in the signal modulation and waveform distortion shall not exceed 1 dB.

Note: *The loss in signal power is the difference between the broadcast power in a 2.046 MHz bandwidth and the signal power recovered by a noise-free, loss-free receiver with 1-chip correlator spacing and a 2.046 MHz bandwidth.*

3.1.1.1.4 *Coarse/acquisition (C/A) code generation and timing.* Each C/A code pattern Gi(t) shall be formed by the Modulo-2 sum of two 1 023-bit linear patterns, G1 and G2i. The G2i sequence shall be formed by effectively delaying the G2 sequence by an integer number of chips to produce one of 36 unique Gi(t) patterns defined in Table 1. The G1 and G2 sequences shall be generated by 10-stage shift registers having the following polynomials as referred to in the shift register input:

a) G1: $X^{10} + X^3 + 1$; and

b) G2: $X^{10} + X^9 + X^8 + X^6 + X^3 + X^2 + 1$.

The initialization vector for the G1 and G2 sequences shall be “1111111111”. The code phase assignments shall be as shown in Table 1.The G1 and G2 registers shall be clocked at a 1.023 MHz rate. Timing relationships related to the C/A code shall be as shown in Figure 1.

3.1.1.2 *Data structure.* The navigation message shall be formatted as shown in Figure 2. Each page, as shown in Figure 6, shall utilize a basic format of a 1 500-bit-long frame with up to 5 subframes, each of 300 bits in length. All words shall be transmitted most significant bit (MSB) first.

3.1.1.2.1 *Subframe structure.* Each subframe and/or page of a subframe shall start with a telemetry (TLM) word followed by a handover word (HOW). The HOW shall be followed by 8 data words. Each word in each frame shall contain 6 parity bits. The TLM word and HOW formats shall be as shown in Figures 3 and 4, respectively.

3.1.1.2.2 *End/start of week.* At the end/start of week:

a) the cyclic paging of subframes 1 through 5 shall restart with subframe 1 regardless of which subframe was last transmitted prior to the end/start of week; and

b) the cycling of 25 pages of subframes 4 and 5 shall restart with page 1 of each of the subframes, regardless of which page was transmitted prior to the end/start of week. All upload and page cutovers shall occur on frame boundaries (i.e. Modulo 30 seconds relative to the end/start of week).

Note: *New data in subframes 4 and 5 may start to be transmitted with any of the 25 pages of these subframes.*

3.1.1.2.3 *Data parity.* Words 1 through 10 of subframes 1 through 5 shall each contain 6 parity bits as their least significant bits (LSBs). In addition, two non-information bearing bits shall be provided as bits 23 and 24 of words 2 and 10 for parity computation purposes.

3.1.1.2.4 *Telemetry (TLM) word*. Each TLM word shall be 30 bits long, occur every 6 seconds in the data frame and be the first word in each subframe. The TLM format shall be as shown in Figure 3. Each TLM word shall begin with a preamble, followed by 16 reserved bits and 6 parity bits.

3.1.1.2.5 *Handover word (HOW).* The HOW shall be 30 bits long and shall be the second word in each subframe/page, immediately following the TLM word. A HOW shall occur every 6 seconds in the data frame. The HOW format and content shall be as shown in Figure 4. The full time-of-week (TOW) count shall consist of the 19 LSBs of the 29-bit Z-count (3.1.1.2.6). The HOW shall begin with the 17 MSBs of the TOW count. These 17 bits shall correspond to the TOW count at the 1.5-second epoch that occurs at the start (leading edge) of the next following subframe.

3.1.1.2.5.1 *Bit 18*. On satellites designed by configuration code 001, bit 18 shall be an “alert” flag. When this flag is raised (bit 18 is a “1”), it shall indicate to the user that the satellite user range accuracy (URA) may be worse than indicated in subframe 1 and that use of the satellite is at the user’s risk.

Table 1. Code phase assignments

Satellite ID number	GPS PRN signal	G2 delay (chips)	First 10 chips octal*
1	1	5	1440
2	2	6	1620
3	3	7	1710
4	4	8	1744
5	5	17	1133
6	6	18	1455
7	7	139	1131
8	8	140	1454
9	9	141	1626
10	10	251	1504
11	11	252	1642
12	12	254	1750
13	13	255	1764
14	14	256	1772
15	15	257	1775
16	16	258	1776
17	17	469	1156
18	18	470	1467
19	19	471	1633
20	20	472	1715
21	21	473	1746
22	22	474	1763
23	23	509	1063
24	24	512	1706
25	25	513	1743
26	26	514	1761
27	27	515	1770
28	28	516	1774
29	29	859	1127
30	30	860	1453
31	31	861	1625
32	32	862	1712
***	33	863	1745
***	34**	950	1713
***	35	947	1134
***	36	948	1456
***	37**	950	1713

* In the octal notation for the first 10 chips of the C/A code as shown in this column, the first digit represents a “1” for the first chip and the last three digits are the conventional octal representation of the remaining 9 chips (e.g. the first 10 chips of the C/A code for pseudo-random noise (PRN) signal assembly 1 are: 1100100000).

** C/A codes 34 and 37 are common.

*** PRN signal assemblies 33 through 37 are reserved for other uses (e.g. ground transmitters).

3.1.1.2.5.2 *Bit 19.* Bit 19 shall be reserved.

3.1.1.2.5.3 *Bits 20, 21 and 22*. Bits 20, 21 and 22 of the HOW shall provide the identification (ID) of the subframe in which that particular HOW is the second word. The ID code shall be as defined below:

ID	Code
1	001
2	010
3	011
4	100
5	101

3.1.1.2.6 *Satellite Z-count.* Each satellite shall internally derive a 1.5-second epoch that shall contain a convenient unit for precisely counting and communicating time. Time stated in this manner shall be referred to as a Z-count. The Z-count shall be provided to the user as a 29-bit binary number consisting of two parts as follows.

3.1.1.2.6.1 *Time-of-week (TOW) count.* The binary number represented by the 19 LSBs of the Z-count shall be referred to as the TOW count and is defined as being equal to the number of 1.5-second epochs that have occurred since the transition from the previous week. The count shall be short-cycled such that the range of the TOW count is from 0 to 403 199 1.5-second epochs (equalling one week) and shall be reset to zero at the end of each week. The TOW count's zero state shall be the 1.5-second epoch that is coincident with the start of the present week. A truncated version of the TOW count, consisting of its 17 MSBs, shall be contained in the HOW of the L1 downlink data stream. The relationship between the actual TOW count and its truncated HOW version shall be as indicated in Figure 5.

Note: *The above-mentioned epoch occurs at (approximately) midnight Saturday night/Sunday morning, where midnight is defined as 0000 hours on the UTC scale which is nominally referenced to the Greenwich Meridian.*

3.1.1.2.6.2 *Week count*. The 10 MSBs of the Z-count shall be a binary representation of the sequential number assigned to the present GPS week (Modulo 1024). The range of this count shall be from 0 to 1 023. Its zero state shall be that week which starts with the 1.5-second epoch occurring at (approximately) the UTC zero-time point (3.1.4). At the expiration of GPS week number 1 023, the GPS week number shall roll over to zero. The previous 1 024 weeks in conversions from GPS time to a calendar date shall be accounted for by the user.

3.1.1.3 DATA CONTENT

3.1.1.3.1 *Subframe 1 — satellite clock and health data*. The content of words 3 through 10 of subframe 1 shall contain the clock parameters and other data as indicated in Table 2. The parameters in a data set shall be valid during the interval of time in which they are transmitted and shall remain valid for an additional period of time after transmission of the next data set has started.

3.1.1.3.1.1 *Week number.* The 10 MSBs of word 3 shall contain the 10 MSBs of the 29-bit Z-count and shall represent the number of the current GPS week at the start of the data set transmission interval with all zeros indicating week "zero." The GPS week number shall increment at each end/start of week epoch.

3.1.1.3.1.2 *User range accuracy (URA).* Bits 13 through 16 of word 3 shall provide the predicted satellite URA as shown in Table 3.

Note 1: *The URA does not include error estimates due to inaccuracies of the single-frequency ionospheric delay model.*

Note 2: *The URA is a statistical indicator of the contribution of the apparent clock and ephemeris prediction accuracies to the ranging accuracies obtainable with a specific satellite based on historical data.*

Table 2. Subframe 1 parameters

Parameter	Number of bits**	Scale factor (LSB)	Effective range***	Units
Week number	10	1		weeks
Satellite accuracy	4			
Satellite health	6	1		discretes
T_{GD}	8*	2^{-31}		seconds
IODC	10			
t_{oc}	16	2^{4}	604 784	seconds
a_{f2}	8*	2^{-55}		seconds/second^2
a_{f1}	16*	2^{-43}		seconds/second
a_{f0}	22*	2^{-31}		seconds

* Parameters so indicated are two's complement, with the sign bit (+ or –) occupying the MSB.
** See Figure 6 for complete bit allocation.
*** Unless otherwise indicated in this column, effective range is the maximum range.

Table 3. User range accuracy

URA	Accuracy
0	2 m
1	2.8 m
2	4 m
3	5.7 m
4	8 m
5	11.3 m
6	16 m
7	32 m
8	64 m
9	128 m
10	256 m
11	512 m
12	1 024 m
13	2 048 m
14	4 096 m
15	Do not use

3.1.1.3.1.3 *Health.* The transmitting satellite 6-bit health indication shall be provided by bits 17 through 22 of word 3. The MSB shall indicate a summary of the health of the navigation data, where:

a) 0 = all navigation data are valid; and
b) 1 = some of the navigation data are not valid.

The 5 LSBs shall indicate the health of the signal components in accordance with 3.1.1.3.3.4. The health indication shall be provided relative to the capabilities of each satellite as designated by the configuration code in 3.1.1.3.3.5. Any satellite that does not have a certain capability shall be indicated as "healthy" if the lack of this capability is inherent in its design or it has been configured into a mode which is normal from a receiver standpoint and does not require that capability. Additional health data shall be given in subframes 4 and 5.

Note: *The data given in subframe 1 may differ from that shown in subframes 4 and/or 5 of other satellites since the latter may be updated at a different time.*

3.1.1.3.1.4 *Issue of data, clock (IODC).* Bits 23 and 24 of word 3 in subframe 1 shall be the 2 MSBs of the 10-bit IODC term. Bits 1 through 8 of word 8 in subframe 1 shall contain the 8 LSBs of the IODC. The IODC shall indicate the issue number of data set. The transmitted IODC shall be different from any value transmitted by the satellite during the preceding 7 days.

Note: *The relationship between the IODC and the Issue of Data, Ephemeris (IODE) terms is defined in 3.1.1.3.2.2.*

3.1.1.3.1.5 *Estimated group delay differential.* Bits 17 through 24 of word 7 shall contain the correction term, TGD, to account for the effect of satellite group delay differential.

Note: *T_{GD} does not include any C/A to P(Y) code relative group delay error.*

3.1.1.3.1.6 *Satellite clock correction parameters.* Bits 9 through 24 of word 8, bits 1 through 24 of word 9, and bits 1 through 22 of word 10 shall contain the parameters needed by the users for apparent satellite clock correction (toc, af2, af1 and af0).

3.1.1.3.1.7 *Reserved data fields*. Reserved data fields shall be as indicated in Table 4. All reserved data fields shall support valid parity within their respective words.

3.1.1.3.2 *Subframes 2 and 3 — satellite ephemeris data.* Subframes 2 and 3 shall contain the ephemeris representation of the transmitting satellite.

3.1.1.3.2.1 *Ephemeris parameters.* The ephemeris parameters shall be as indicated in Table 5. For each parameter in subframe 2 and 3, the number of bits, the scale factor of the LSB, the range, and the units shall be as specified in Table 6.

3.1.1.3.2.2 *Issue of data, ephemeris (IODE).* The IODE shall be an 8-bit number equal to the 8 LSBs of the 10-bit IODC of the same data set. The IODE shall be provided in both subframes 2 and 3 for the purpose of comparison with the 8 LSBs of the IODC term in subframe 1. Whenever these three terms do not match, as a result of a data set cutover, new data shall be collected. The transmitted IODE shall be different from any value transmitted by the satellite during the preceding six hours (*Note 1*). Any change in the subframe 2 and 3 data shall be accomplished in concert with a change in both IODE words. Change to new data sets shall occur only on hour boundaries except for the first data set of a new upload. Additionally, the toe value, for at least the first data set transmitted by a satellite after an upload, shall be different from that transmitted prior to the change (*Note 2*).

Table 4. Subframe 1 reserved data fields

Word	Bit
3	11 – 12
4	1 – 24
5	1 – 24
6	1 – 24
7	1 – 16

Table 5. Ephemeris data

M_0	Mean anomaly at reference time
Δn	Mean motion difference from computed value
e	Eccentricity
$\sqrt{A}$	Square root of the semi-major axis
$OMEGA_0$	Longitude of ascending node of orbit plane at weekly epoch
i_0	Inclination angle at reference time
ω	Argument of perigee
OMEGADOT	Rate of right ascension
iDOT	Rate of inclination angle
C_{uc}	Amplitude of the cosine harmonic correction term to the argument of latitude
C_{us}	Amplitude of the sine harmonic correction term to the argument of latitude
C_{rc}	Amplitude of the cosine harmonic correction term to the orbit radius
C_{rs}	Amplitude of the sine harmonic correction term to the orbit radius
C_{ic}	Amplitude of the cosine harmonic correction term to the angle of inclination
C_{is}	Amplitude of the sine harmonic correction term to the angle of inclination
t_{oe}	Reference time, ephemeris
IODE	Issue of data, ephemeris

Table 6. Ephemeris parameters

Parameter	Number of bits**	Scale factor (LSB)	Effective range***	Units
IODE	8			
Crs	16*	2–5		metres
Δn	16*	2–43		semi-circles/second
M0	32*	2–31		semi-circles
Cuc	16*	2–29		radians
e	32	2–33	0.03	dimensionless
Cus	16*	2–29		radians
√A	32	2–19		metres1/2
toe	16	24	604 784	seconds
Cic	16*	2–29		radians
OMEGA0	32*	2–31		semi-circles
Cis	16*	2–29		radians
i0	32*	2–31		semi-circles
Crc	16*	2–5		metres
ω	32*	2–31		semi-circles
OMEGADOT	24*	2–43		semi-circles/second
iDOT	14*	2–43		semi-circles/second

* Parameters so indicated are two's complement, with the sign bit (+ or –) occupying the MSB.
** See Figure 6 for complete bit allocation in subframe.
*** Unless otherwise indicated in this column, effective range is the maximum range attainable with the indicated bit allocation and scale factor.

Note 1: *The IODE/IODC terms provide the receiver with a means for detecting any changes in the ephemeris/clock representation parameters.*

Note 2: *The first data set may change (3.1.1.2.2) at any time during the hour and therefore may be transmitted by the satellite for less than 1 hour.*

3.1.1.3.2.3 *Reserved data fields.* Within word 10, subframe 2, bits 17 through 22 shall be reserved. Reserved data fields shall support the valid parity within their respective words.

3.1.1.3.3 *Subframes 4 and 5 — support data.* Both subframes 4 and 5 shall be subcommutated 25 times each. With the possible exception of “reserved” pages and explicit repeats, each page shall contain different data in words 3 through 10. The pages of subframe 4 shall use 6 different formats, and the pages of subframe 5 shall use two different formats as indicated in Figure 6.

Pages of subframe 4 shall be as follows:

a) Pages 2, 3, 4, 5, 7, 8, 9 and 10: almanac data for satellites 25 through 32 respectively. If the 6-bit health status word of page 25 is set to 6 “ones” (3.1.1.3.3.4) then the satellite ID of the page shall not have a value in the range of 25 through 32;

Note: *These pages may be designed for other functions. The format and content for each page is defined by the satellite ID of that page.*

b) Page 17: special messages;

c) Page 18: ionospheric and UTC data;

d) Page 25: satellite configurations for 32 satellites; and

e) Pages 1, 6, 11, 12, 13, 14, 15, 16, 19, 20, 21, 22, 23 and 24: reserved.

Pages of subframe 5 shall be as follows:

a) Pages 1 through 24: almanac data for satellite 1 through 24; and

b) Page 25: satellite health data for satellite 1 through 24, the almanac reference time and the almanac reference week number.

3.1.1.3.3.1 *Data ID.* The two MSBs of word 3 in each page shall contain the data ID that defines the applicable GPS navigation data structure. The data ID shall be as indicated in Table 7 in accordance with the following:

a) for those pages which are assigned to contain the almanac data of one specific satellite, the data ID shall define the data structure utilized by that satellite whose almanac data are contained in that page;

b) for all other pages, the data ID shall denote the data structure of the transmitting satellite; and

c) data ID “1” (denoted by binary state 00) shall not be used.

3.1.1.3.3.2 *Satellite ID.* The satellite ID shall be provided by bits 3 through 8 of word 3 in each page. The satellite IDs shall be utilized two ways:

a) for those pages which contain the almanac data of a given satellite, the satellite ID shall be the same number that is assigned the PRN code phase of that satellite in accordance with Table 1; and

b) for all other pages the satellite ID assigned in accordance with Table 7 shall serve as the "page ID". IDs 1 through 32 shall be assigned to those pages which contain the almanac data of specific satellites (pages 1 through 24 of subframe 5 and pages 2 through 5, and 7 through 10 of subframe 4). The "0" ID (binary all zeros) shall be assigned to indicate a dummy satellite, while IDs 51 through 63 shall be utilized for pages containing other than almanac data for a specific satellite (Notes 1 and 2).

Note 1: *Specific IDs are reserved for each page of subframes 4 and 5; however, the satellite ID of pages 2, 3, 4, 5, 7, 8, 9 and 10 of subframe 4 may change for each page to reflect the alternate contents for that page.*

Note 2: *The remaining IDs (33 through 50) are unassigned.*

Table 7. Data IDs and satellite IDs in subframes 4 and 5

Page	Subframe 4		Subframe 5	
	Data ID	Satellite ID*	Data ID	Satellite ID*
1	***	57	**	1
2****	**	25	**	2
3****	**	26	**	3
4****	**	27	**	4
5****	**	28	**	5
6	***	57	**	6
7****	**	29	**	7
8****	**	30	**	8
9****	**	31	**	9
10****	**	32	**	10
11	***	57	**	11
12	***	62	**	12
13	***	52	**	13
14	***	53	**	14
15	***	54	**	15
16	***	57	**	16
17	***	55	**	17
18	***	56	**	18
19	***	58*****	**	19
20	***	59*****	**	20
21	***	57	**	21
22	***	60*****	**	22
23	***	61*****	**	23
24	***	62	**	24
25	***	63	***	51

* "0" indicates "dummy" satellite. When using "0" to indicate a dummy satellite, the data ID of the transmitting satellite is used.
** Data ID of that satellite whose satellite ID appears in that page.
*** Data ID of transmitting satellite.
**** Pages 2, 3, 4, 5, 7, 8, 9 and 10 of subframe 4 may contain almanac data for satellites 25 through 32, respectively, or data for other functions as identified by a different satellite ID from the value shown.
***** Satellite ID may vary.

3.1.1.3.3.3 *Almanac.* Pages 1 through 24 of subframe 5, as well as pages 2 through 5 and 7 through 10 of subframe 4 shall contain the almanac data and a satellite health status word (3.1.1.3.3.4) for up to 32 satellites. The almanac data shall be a reduced-precision subset of the clock and ephemeris parameters. The data shall occupy all bits of words 3 through 10 of each page except the 8 MSBs of word 3 (data ID and satellite ID), bits 17 through 24 of word 5 (satellite health), and the 50 bits devoted to parity. The number of bits, the scale factor (LSB), the range and the units of the almanac parameters shall be as indicated in Table 8. The almanac message for any dummy satellite shall contain alternating “ones” and “zeros” with a valid parity.

3.1.1.3.3.3.1 Almanac reference time. The almanac reference time, toa, shall be a multiple of 212 seconds occurring approximately 70 hours after the first valid transmission time for this almanac data set. The almanac shall be updated often enough to ensure that GPS time, t, will differ from toa by less than 3.5 days during the transmission period. The almanac parameters shall be updated at least once every 6 days during normal operations.

3.1.1.3.3.3.2 Almanac time parameters. The almanac time parameters shall consist of an 11-bit constant term (af0) and an 11-bit first order term (af1).

3.1.1.3.3.3.3 Almanac reference week. Bits 17 through 24 of word 3 in page 25 of subframe 5 shall indicate the number of the week (WNa) to which the almanac reference time (toa) is referenced. The WNa term shall consist of the 8 LSBs of the full week number. Bits 9 through 16 of word 3 in page 25 of subframe 5 shall contain the value of toa that is referenced to this WNa.

3.1.1.3.3.4 *Health summary.* Subframes 4 and 5 shall contain two types of satellite health data:

a) each of the 32 pages that contain the clock/ephemeris related almanac data shall provide an 8-bit satellite health status word regarding the satellite whose almanac data they carry; and

b) the 25th pages of subframes 4 and 5 jointly shall contain 6-bit health data for up to 32 satellites.

3.1.1.3.3.4.1 The 8-bit health status words shall occupy bits 17 through 24 of word 5 in those 32 pages that contain the almanac data for individual satellites. The 6-bit health status words shall occupy the 24 MSBs of words 4 through 9 in page 25 of subframe 5, and bits 19 through 24 of word 8, the 24 MSBs of word 9, and the 18 MSBs of word 10 in page 25 of subframe 4.

Table 8. Almanac parameters

Parameter	Number of bits**	Scale factor (LSB)	Effective range***	Units
e	16	2^{-21}		dimensionless
t_{oa}	8	2^{12}	602 112	seconds
δ_i****	16*	2^{-19}		semi-circles
OMEGADOT	16*	2^{-38}		semi-circles/second
$\sqrt{A}$	24*	2^{-11}		metres$^{1/2}$
$OMEGA_0$	24*	2^{-23}		semi-circles
ω	24*	2^{-23}		semi-circles
M_0	24*	2^{-23}		semi-circles
a_{f0}	11*	2^{-20}		seconds
a_{f1}	11*	2^{-38}		seconds/second

* Parameters so indicated are two's complement, with the sign bit (+ or –) occupying the MSB.
** See Figure B-6 for complete bit allocation in subframe.
*** Unless otherwise indicated in this column, effective range is the maximum range attainable with the indicated bit allocation and scale factor.
**** Relative to $i_0 = 0.30$ semi-circles.

3.1.1.3.3.4.2 The 3 MSBs of the 8-bit health status words shall indicate health of the navigation data in accordance with the code given in Table 9. The 6-bit words shall provide a 1-bit summary of the navigation data's health status in the MSB position in accordance with 3.1.1.3.1.3. The 5 LSBs of both the 8-bit and the 6-bit health status words shall provide the health status of the satellite's signal components in accordance with the code given in Table 10.

Table 9. Navigation data health indication

Bit position in page			
137	**138**	**139**	**Indication**
0	0	0	ALL DATA OK
0	0	1	PARITY FAILURE — some or all parity bad
0	1	0	TLM/HOW FORMAT PROBLEM — any departure from standard format (e.g. preamble misplaced and/or incorrect), except for incorrect Z-count, as reported in HOW
0	1	1	Z-COUNT in HOW BAD — any problem with Z-count value not reflecting actual code phase
1	0	0	SUBFRAMES 1, 2, 3 — one or more elements in words 3 through 10 of one or more subframes are bad
1	0	1	SUBFRAMES 4, 5 — one or more elements in words 3 through 10 of one or more subframes are bad
1	1	0	ALL UPLOADED DATA BAD — one or more elements in words 3 through 10 of any one (or more) subframes are bad
1	1	1	ALL DATA BAD — TLM word and/or HOW and one or more elements in any one (or more) subframes are bad

Table 10. Codes for health of satellite signal components

MSB				LSB	Indication
0	0	0	0	0	ALL SIGNALS OK
1	1	1	0	0	SATELLITE IS TEMPORARILY OUT — do not use this satellite during current pass
1	1	1	0	1	SATELLITE WILL BE TEMPORARILY OUT — use with caution
1	1	1	1	0	SPARE
1	1	1	1	1	MORE THAN ONE COMBINATION WOULD BE REQUIRED TO DESCRIBE ANOMALIES, EXCEPT THOSE MARKED BY
All other combinations					SATELLITE EXPERIENCING CODE MODULATION AND/OR SIGNAL POWER LEVEL TRANSMISSION PROBLEMS. The usermay experience intermittent tracking problems if satellite is acquired.

3.1.1.3.3.4.3 A special meaning shall be assigned, to the 6 “ones” combination of the 6-bit health status words in the 25th pages of subframes 4 and 5; it shall indicate that “the satellite which has that ID is not available and there may be no data regarding that satellite in the page of subframe 4 or 5 that is assigned to normally contain the almanac data of that satellite”.

Note: *This special meaning applies to the 25th pages of subframes 4 and 5 only. There may be data regarding another satellite in the almanac page referred to above as defined in 3.1.1.3.3.3.*

3.1.1.3.3.4.4 The health indication shall be provided relative to the capabilities of each satellite as designated by the configuration code in 3.1.1.3.3.5. Accordingly, any satellite that does not have a certain capability shall be indicated as “healthy” if the lack of this capability is inherent in its design or it has been configured into a mode which is normal from a receiver standpoint and does not require that capability. The predicted health data shall be updated at the time of upload.

Note 1: *The transmitted health data may not correspond to the actual health of the transmitting satellite or other satellites in the constellation.*

Note 2: *The data given in subframes 1, 4 and 5 of the other satellites may differ from that shown in subframes 4 and/or 5 since the latter may be updated at a different time.*

3.1.1.3.3.5 *Satellite configuration summary.* Page 25 of subframe 4 shall contain a 4-bit-long term for each of up to 32 satellites to indicate the configuration code of each satellite. These 4-bit terms shall occupy bits 9 through 24 of words 3, the 24 MSBs of words 4 through 7, and the 16 MSBs of word 8, all in page 25 of subframe 4. The MSB of each 4-bit term shall indicate whether anti-spoofing is activated (MSB = 1) or not activated (MSB = 0). The 3 LSBs shall indicate the configuration of each satellite using the following code:

Code	Satellite configuration
001	Block II/IIA/IIR satellite
010	Block IIR-M satellite
011	Block IIF satellite

3.1.1.3.3.6 *UTC parameters.* Page 18 of subframe 4 shall include:

a) the parameters needed to relate GPS time to UTC time; and

b) notice to the user regarding the scheduled future or past (relative to navigation message upload) value of the delta time due to leap seconds (t_{LSF}), together with the week number (WN_{LSF}) and the day number (DN) at the end of which the leap second becomes effective. “Day one” shall be the first day relative to the end/start of week and the WN_{LSF} value consists of the 8 LSBs of the full week number. The absolute value of the difference between the untruncated WN and WN_{LSF} values shall not exceed 127.

Note: *The user is expected to account for the truncated nature of this parameter as well as truncation of WN, WN_t and WN_{LSF} due to rollover of the full week number (3.1.1.2.6.2).*

3.1.1.3.3.6.1 The 24 MSBs of words 6 through 9, and the 8 MSBs of word 10 in page 18 of subframe 4 shall contain the parameters related to correlating UTC time with GPS time. The bit length, scale factors, ranges, and units of these parameters shall be as specified in Table 11.

3.1.1.3.3.7 *Ionospheric parameters*. The ionospheric parameters that allow the GPS SPS user to utilize the ionospheric model for computation of the ionospheric delay shall be contained in page 18 of subframe 4 as specified in Table 12.

3.1.1.3.3.8 *Special message.* Page 17 of subframe 4 shall be reserved for special messages.

Table 11. UTC parameters

Parameter	Number of bits**	Scale factor (LSB)	Effective range***	Units
A_o A_1 Δ_{tLS} t_{ot}	32* 24* 8* 8	2^{-30} 2^{-50} 1 2^{12}	seconds seconds/second seconds seconds	602 112
WN_t	8	1	weeks	
WN_{LSF} DN Δt_{LSF}	8 8**** 8*	1 1 1	weeks days seconds	7

* Parameters so indicated are two’s complement, with the sign bit (+ or –) occupying the MSB.

** See Figure 6 for complete bit allocation in subframe.
*** Unless otherwise indicated in this column, effective range is the maximum range attainable with the indicated bit
allocation and scale factor.
**** Right justified.

Table 12. Ionospheric parameters

Parameter	Number of bits**	Scale factor (LSB)	Effective range***	Units
α_0	8*	2^{-30}		seconds
α_1	8*	2^{-27}		seconds/semi-circle
α_2	8*	2^{-24}		seconds/semi-circle^2
α_3	8*	2^{-24}		seconds/semi-circle^3
β_0	8*	2^{11}		seconds
β_1	8*	2^{14}		seconds/semi-circle
β_2	8*	2^{16}		seconds/semi-circle^2
β_3	8*	2^{16}		seconds/semi-circle^3

* Parameters so indicated are two's complement, with the sign bit (+ or –) occupying the MSB.

** See Figure 6 for complete bit allocation in subframe.
*** Unless otherwise indicated in this column, effective range is the maximum range attainable with the indicated bit allocation and scale factor.

3.1.1.3.3.9 *Reserved data fields.* All bits of words 3 through 10, except the 58 bits used for data ID, satellite (page) ID, parity (six LSBs of each word) and parity computation (bits 23 and 24 of word 10) of pages 1, 6, 11, 12, 13, 14, 15, 16, 19, 20, 21, 22, 23 and 24 of subframe 4, and those almanac pages assigned satellite ID of zero shall be designated as reserved. Other reserved bits in subframes 4 and 5 shall be as shown in Table13. Reserved bit positions of each word shall contain a pattern of alternating ones and zeros with a valid word parity.

3.1.2 DEFINITIONS OF PROTOCOLS FOR DATA APPLICATION

Note: *This section defines the inter-relationships of the data broadcast message parameters. It provides definitions of parameters that are not transmitted, but are used by either or both non-aircraft and aircraft elements, and that define terms applied to determine the navigation solution and its integrity.*

Table 13. Reserved bits in subframes 4 and 5

Subframe	Pages	Words	Reserved bit position in word
4	17	10	17 – 22
4	18	10	9 – 22
4	25	8	17 – 18
4	25	10	19 – 22
5	25	10	4 – 22

Table 14. Parity encoding algorithms

D1	= d1 ⊕ D*30
D2	= d2 ⊕ D*30
D3	= d3 ⊕ D*30
•	•
•	•
•	•
•	•
D24	= d24 ⊕ D*30
D25	= D*29 ⊕ d1 ⊕ d2 ⊕ d3 ⊕ d5 ⊕ d6 ⊕ d10 ⊕ d11 ⊕ d12 ⊕ d13 ⊕ d14 ⊕ d17 ⊕ d18 ⊕ d20 ⊕ d23
D26	= D*30 ⊕ d2 ⊕ d3 ⊕ d4 ⊕ d6 ⊕ d7 ⊕ d11 ⊕ d12 ⊕ d13 ⊕ d14 ⊕ d15 ⊕ d18 ⊕ d19 ⊕ d21 ⊕ d24
D27	= D*29 ⊕ d1 ⊕ d3 ⊕ d4 ⊕ d5 ⊕ d7 ⊕ d8 ⊕ d12 ⊕ d13 ⊕ d14 ⊕ d15 ⊕ d16 ⊕ d19 ⊕ d20 ⊕ d22
D28	= D*30 ⊕ d2 ⊕ d4 ⊕ d5 ⊕ d6 ⊕ d8 ⊕ d9 ⊕ d13 ⊕ d14 ⊕ d15 ⊕ d16 ⊕ d17 ⊕ d20 ⊕ d21 ⊕ d23
D29	= D*30 ⊕ d1 ⊕ d3 ⊕ d5 ⊕ d6 ⊕ d7 ⊕ d9 ⊕ d10 ⊕ d14 ⊕ d15 ⊕ d16 ⊕ d17 ⊕ d18 ⊕ d21 ⊕ d22 ⊕ d24
D30	= D*29 ⊕ d3 ⊕ d5 ⊕ d6 ⊕ d8 ⊕ d9 ⊕ d10 ⊕ d11 ⊕ d13 ⊕ d15 ⊕ d19 ⊕ d22 ⊕ d23 ⊕ d24

where:

a) D1, D2, D3, ... D29, D30 are the bits transmitted by the satellite;
b) D25, ... D30 are the computed parity bits;
c) d1, d2, ... d24 are the source data bits;
d) ⊕ is the Modulo-2 or “Exclusive-Or” operation; and
   - is used to identify the last two bits of the previous word of the subframe.

3.1.2.1 *Parity algorithm*. GPS parity algorithms are defined as indicated in Table 14.

3.1.2.2 *Satellite clock correction parameters.* GPS system time *t* is defined as:

$$t = t_{sv} - (\Delta t_{sv})_{L1}$$

where

t = GPS system time (corrected for beginning and end-of-week crossovers);

t_{sv} = satellite time at transmission of the message;

$(\Delta t_{sv})_{L1}$ = the satellite PRN code phase offset;

$(\Delta t_{sv})_{L1} = a_{f0} + a_{f1}(t - t_{oc}) + a_{f2}(t - t_{oc})_2 + \Delta t_r - T_{GD}$

where

a_{f0}, af1 and a_{f2} and t_{oc}, are contained in subframe 1; and

Δt_r = the relativistic correction term (seconds)

$\Delta t_r = Fe\sqrt{A}\sin E_k$

where

e and A are contained in subframes 2 and 3;

E_k is defined in Table 15; and

$$F = \frac{-2(\mu)^{1/2}}{e^2} = -4{,}442807633(10)^{-10}\, s/m^{1/2}$$

where

μ = WGS-84 universal gravitational parameter (3.986005×10^{14} m^3/s^2)

c = the speed of light in a vacuum (2.99792458×10^8 m/s)

Note: *The value of t is intended to account for the beginning or end-of-week crossovers. That is, if the quantity t-t_{oc} is greater than 302 400 seconds, subtract 604 800 seconds from t. If the quantity t-t_{oc} is less than –302 400 seconds, add 604 800 seconds to t.*

3.1.2.3 *Satellite position.* The current satellite position (X_k, Y_k, Z_k) is defined as shown in Table 15.

3.1.2.4 *Ionospheric correction.* The ionospheric correction (Tiono) is defined as:

$$T_{iono} = \begin{cases} F\times\left[5.0\times10^{-9} + AMP\left(1-\frac{x^2}{2}+\frac{x^4}{24}\right)\right], & |x| < 1.57 \\ F\times(5.0\times10^{-9}) + & |x| \geq 1.57 \end{cases} \text{(seconds)}$$

where

$$AMP = \begin{cases} \sum_{n=0}^{3} \alpha_n \phi_{m,}^n & AMP \geq 0 \\ \text{if } AMP < 0, & AMP = 0 \end{cases} \text{(seconds)}$$

$$x = \frac{2\pi(t\text{-}50\ 400)}{PER}, \text{(radians)}$$

$$PER = \begin{cases} \sum_{n=0}^{3} \beta_n \phi_{m,}^n & PER \geq 72\,000 \\ \text{if } PER < 72\,000, & PER = 72\,000 \end{cases} \text{(seconds)}$$

$F = 1.0 + 16.0[0.53 - E]^3$

α_n and β_n are the satellite transmitted data words with n = 0, 1, 2 and 3

$\varphi_m = \varphi_i + 0.064 \cos(\lambda_i - 1.617)$ (semi-circles)

$$\lambda_i = \lambda_u + \frac{\psi \sin A}{\cos \phi_i} (semi-circles)$$

$$\bar{\phi}_i = \phi_u + \psi \cos A \text{ (semi-circles)}$$

$$\phi_i = \begin{cases} \phi_i = \bar{\phi}_i \text{ if } |\bar{\phi}_i| \le 0.416 \\ \phi_i = +0.416 \text{ if } \bar{\phi}_i > 0.416, \\ \phi_i = -0.416 \text{ if } \bar{\phi}_i < -0.416 \end{cases} \text{(semi-circles)}$$

$$\psi = \frac{0.0137}{E+0.11} - 0.022 \text{ (semi-circles)}$$

t = $4.32 \times 10^4 \lambda_i + GPS$ time (seconds) where 0 ≤ t < 86 400, therefore: if t ≥ 86 400 seconds, subtract 86 400 seconds; and if t < 0 seconds, add 86 400 seconds

E = satellite elevation angle

3.1.2.4.1 The terms used in computation of ionospheric delay are as follows:

a) Satellite transmitted terms

α_n = the coefficients of a cubic equation representing the amplitude of the vertical delay (4 coefficients = 8 bits each)

β_n = the coefficients of a cubic equation representing the period of the model (4 coefficients = 8 bits each)

b) Receiver generated terms

E = elevation angle between the user and satellite (semi-circles)

A = azimuth angle between the user and satellite, measured clockwise positive from the true North (semi-circles)

φ_u = user geodetic latitude (semi-circles) WGS-84

λ_u = user geodetic longitude (semi-circles) WGS-84

GPS time = receiver computed system time

c) Computed terms

x = phase (radians)

F = obliquity factor (dimensionless)

t = local time (seconds)

φ_m = geomagnetic latitude of the earth projection of the ionospheric intersection point (mean ionospheric height assumed 350 km) (semi-circles)

λ_i = geomagnetic longitude of the earth projection of the ionospheric intersection point (semi-circles)

φ_i = geomagnetic latitude of the earth projection of the ionospheric intersection point (semi-circles)

ψ = earth's central angle between user position and earth projection of ionospheric intersection point (semi-circles)

Table 15. Elements of coordinate systems

$A = \left(\sqrt{A}\right)^2$	Semi-major axis
$n_0 = \sqrt{\frac{\mu}{A^3}}$	Computed mean motion
$t_k = t - t_{oe}$	Time from ephemeris reference epoch*
$n = n_0 + \Delta n$	Corrected mean motion
$M_k = M_0 + nt_k$	Mean anomaly
$M_k = E_k - e\sin E_k$	Kepler's equation for eccentric anomaly (may be solved by iteration)
$v_k = \tan^{-1}\left\{\frac{\sin v_k}{\cos v_k}\right\} = \tan^{-1}\left\{\frac{\sqrt{1-e^2}\sin E_k/(1-e\cos E_k)}{(\cos E_k - e)/(1-e\cos E_k)}\right\}$	True anomaly
$E_k = \cos^{-1}\left\{\frac{e+\cos v_k}{1+e\cos v_k}\right\}$	Eccentric anomaly
$\phi_k = v_k + \omega$	Argument of latitude
	Second Harmonic Perturbations
$\delta u_k = C_{us}\sin 2\phi_k + C_{uc}\cos 2\phi_k$	Argument of latitude correction
$\delta r_k = C_{rc}\sin 2\phi_k + C_{rs}\sin 2\phi_k$	Radius correction
$\delta i_k = C_{ic}\cos 2\phi_k + C_{is}\sin 2\phi_k$	Inclination correction
$u_k = \phi_k + \delta u_k$	Corrected argument of latitude
$r_k = A(1-e\cos E_k) + \delta r_k$	Corrected radius
$i_k = i_0 + \delta i_k + (iDOT)t_k$	Corrected inclination
$x'_k = r_k\cos u_k$ $y'_k = r_k\sin u_k$	Positions in orbital plane
$\Omega_k = \Omega_0 + (\dot{\Omega} - \Omega_e)t_k - \dot{\Omega}_e t_{oe}$	Corrected longitude of ascending node
$x_k = x'_k\cos\Omega_k - y'_k\cos i_k\sin\Omega_k$ $y_k = x'_k\sin\Omega_k - y'_k\cos i_k\cos\Omega_k$ $z_k = y'_k\sin i_k$	Earth-centred, earth-fixed coordinates

* t is GPS system time at time of transmission, i.e. GPS time corrected for transit time (range/speed of light). Furthermore, t_k is the actual total time difference between the time t and the epoch time t_{oe}, and must account for beginning or end-of-week crossovers. That is, if t_k is greater than 302 400 seconds, subtract 604 800 seconds from t_k. If t_k is less than –302 400 seconds, add 604 800 seconds to t_k.

3.1.3 AIRCRAFT ELEMENTS

3.1.3.1 GNSS (GPS) RECEIVER

3.1.3.1.1 *Satellite exclusion*. The receiver shall exclude any marginal or unhealthy satellite.

Note: *Conditions indicating that a satellite is "healthy", "marginal" or "unhealthy" can be found in the United States Department of Defense, Global Positioning System – Standard Positioning Service – Performance Standard, 4th Edition, September 2008, Section 2.3.2.*

3.1.3.1.2 *Satellite tracking*. The receiver shall provide the capability to continuously track a minimum of four satellites and generate a position solution based upon those measurements.

3.1.3.1.3 Doppler *shift*. The receiver shall be able to compensate for dynamic Doppler shift effects on nominal SPS signal carrier phase and C/A code measurements. The receiver shall compensate for the Doppler shift that is unique to the anticipated application.

3.1.3.1.4 Resistance *to interference*. The receiver shall meet the requirements for resistance to interference as specified in Chapter 3, 3.7.

3.1.3.1.5 Application *of clock and ephemeris data*. The receiver shall ensure that it is using the correct ephemeris and clock data before providing any position solution. The receiver shall monitor the IODC and IODE values, and to update ephemeris and clock databased upon a detected change in one or both of these values. The SPS receiver shall use clock and ephemeris data with corresponding IODC and IODE values for a given satellite.

3.1.4 TIME

3.1.4.1. GPS time shall be referenced to a UTC (as maintained by the U.S. Naval Observatory) zero time-point defined as midnight on the night of 5 January 1980/morning of 6 January 1980. The largest unit used in stating GPS time shall be 1 week, defined as 604 800 seconds. The GPS time scale shall be maintained to be within 1 microsecond of UTC (Modulo 1 second) after correction for the integer number of leap seconds difference. The navigation data shall contain the requisite data for relating GPS time to UTC.

3.2 GLOBAL NAVIGATION SATELLITE SYSTEM (GLONASS) CHANNEL OF STANDARD ACCURACY (CSA) (L1)

Note: *In this section the term GLONASS refers to all satellites in the constellation. Standards relating only to GLONASS-M satellites are qualified accordingly.*

3.2.1 NON-AIRCRAFT ELEMENTS

3.2.1.1 RF CHARACTERISTICS

3.2.1.1.1 *Carrier frequencies.* The nominal values of L1 carrier frequencies shall be as defined by the following expressions:

$$f_{k1} = f_{01} + k\Delta f_1$$

where

k = –7, …, 0, 1, …, 6 are carrier numbers (frequency channels) of the signals transmitted by GLONASS satellites in the L1 sub-band;

f01 = 1 602 MHz; and

Δf1 = 0.5625 MHz.

Carrier frequencies shall be coherently derived from a common on-board time/frequency standard. The nominal value of frequency, as observed on the ground, shall be equal to 5.0 MHz. The carrier frequency of a GLONASS satellite shall be within $\pm 2 \times 10_{-11}$ relative to its nominal value f_k.

Note 1: *The nominal values of carrier frequencies for carrier numbers k are given in Table 16.*

Note 2: *For GLONASS-M satellites, the L2 channel of standard accuracy (CSA) navigation signals will occupy the 1 242.9375 – 1 251.6875 MHz ±0.511 MHz bandwidth as defined by the following expressions:*

$$f_{k2} = f_{02} + k\Delta f_2,$$

$$f_{02} = 1\ 246\ \text{MHz};\ \Delta f_2 = 0.4375\ \text{MHz}.$$

For any given value of k the ratio of carrier frequencies of L1 and L2 sub-bands will be equal to:

$$\frac{f_{k2}}{f_{k1}} = \frac{7}{9}$$

Table 16. L1 carrier frequencies

Carrier number	$H^{A}{}_{n}$ (see 3.2.1.3.4)	Nominal value of frequency in L1 sub-band (MHz)
06	6	1 605.3750
05	5	1 604.8125
4	4	1 604.2500
3	3	1 603.6875
2	2	1 603.1250
1	1	1 602.5625
0	0	1 602.0000
–1	31	1 601.4375
–2	30	1 600.8750
–3	29	1 600.3125
–4	28	1 599.7500
–5	27	1 599.1875
–6	26	1 598.6250
–7	25	1 598.0625

3.2.1.1.2 *Carrier phase noise*. The phase noise spectral density of the unmodulated carrier shall be such that a phase locked loop of 10 Hz one-sided noise bandwidth provides the accuracy of carrier phase tracking not worse than 0.1 radian (1 sigma).

3.2.1.1.3 *GLONASS pseudo-random code generation*. The pseudo-random ranging code shall be a 511-bit sequence that is sampled at the output of the seventh stage of a 9-stage shift register. The initialisation vector to generate this sequence shall be “111111111”. The generating polynomial that corresponds to the 9-stage shift register shall be:

$$G(x) = 1 + x^5 + x^9.$$

3.2.1.1.4 *Spurious emissions*. The power of the transmitted RF signal beyond the GLONASS allocated bandwidth shall not be more than –40 dB relative to the power of the unmodulated carrier.

Note 1: *GLONASS satellites launched during 1998 to 2005 and beyond use filters limiting out-of-band emissions to the harmful interference limit contained in Recommendation ITU-R RA.769 for the 1 660 – 1 670 MHz band.*

Note 2: *GLONASS satellites launched beyond 2005 use filters limiting out-of-band emissions to the harmful interference limit contained in Recommendation ITU-R RA.769 for the 1 610.6 – 1 613.8 MHz and 1 660 – 1 670 MHz bands.*

3.2.1.1.5 *Correlation loss*. The loss in the recovered signal power due to imperfections in the signal modulation and waveform distortion shall not exceed 0.8 dB.

Note: *The loss in signal power is the difference between the broadcast power in a 1.022 MHz bandwidth and the signal power recovered by a noise-free, loss-free receiver with 1-chip correlator spacing and a 1.022 MHz bandwidth.*

3.2.1.2 DATA STRUCTURE

3.2.1.2.1 *General*. The navigation message shall be transmitted as a pattern of digital data which are coded by Hamming code and transformed into relative code. Structurally, the data pattern shall be generated as continuously repeating superframes.

The superframe shall consist of the frames and the frames shall consist of the strings. The boundaries of strings, frames and superframes of navigation messages from different GLONASS satellites shall be synchronized within 2 milliseconds.

3.2.1.2.2 *Superframe structure*. The superframe shall have a 2.5-minute duration and shall consist of 5 frames. Within each superframe a total content of non-immediate information (almanac for 24 GLONASS satellites) shall be transmitted.

Note: *Superframe structure with indication of frame numbers in the superframe and string numbers in the frames is shown in Figure 7.*

3.2.1.2.3 *Frame structure.* Each frame shall have a 30-second duration and shall consist of 15 strings. Within each frame the total content of immediate information (ephemeris and time parameters) for given satellite and a part of nonimmediate information (almanac) shall be transmitted. The frames 1 through 4 shall contain the part of almanac for 20 satellites (5 satellites per frame) and frame 5 shall contain the remainder of almanac for 4 satellites. The almanac for one satellite shall occupy two strings.

Note: *Frame structures are shown in Figures 8 and 9.*

3.2.1.2.4 *String structure*. Each string shall have a 2-second duration and shall contain binary chips of data and time mark. During the last 0.3 second within this 2-second interval (at the end of each string) the time mark shall be transmitted. The time mark (shortened pseudo-random sequence) shall consist of 30 chips with a time duration for each chip of 10 milliseconds and having the following sequence:

1 1 1 1 1 0 0 0 1 1 0 1 1 1 0 1 0 1 0 0 0 0 1 0 0 1 0 1 1 0.

During the first 1.7 seconds within this 2-second interval (in the beginning of each string) 85 bits of data (each data bit of a 20 milliseconds duration) shall be transmitted in bi-binary format. The numbers of bits in the string shall be increased from right to left. Along with information bits (bit positions 9 through 84) the check bits of Hamming code (KX) (bit positions 1 through 8) shall be transmitted. The Hamming code shall have a code length of 4. The data of one string shall be separated from the data of adjacent strings by time mark (MB). The words of the data shall be registered by MSB ahead. In each string bit position, 85 shall be an idle chip (“0”) and be transmitted first.

3.2.1.2.4.1 *Strings 1 through 4.* The information contained in strings 1 through 4 of each frame shall correspond to the satellite from which it is transmitted. This information shall not be changed within the superframe.

3.2.1.2.4.2 *Strings 5 through 15*. Strings 5 through 15 of each frame shall contain GLONASS almanac for 4 or 5 satellites. The information contained in the fifth string shall be repeated in each frame of the superframe.

Note: *String structure is given in Figure 10.*

3.2.1.3 DATA CONTENT

3.2.1.3.1 *Ephemeris and time parameters.* The ephemeris and time parameters shall be as follows:

m = the string number within the frame;

t_k = the time referenced to the beginning of the frame within the current day. It is calculated according to the satellite time scale. The integer number of hours elapsed since the beginning of the current day is registered in the 5 MSBs. The integer number of minutes elapsed since the beginning of the current hour is registered in the next 6 bits. The number of 30-second intervals elapsed since the beginning of the current minute is registered in the one LSB. The beginning of the day according to the satellite time scale coincides with the beginning of the recurrent superframe;

t_b = the time interval within the current day according to UTC(SU) + 03 hours 00 min. The immediate data transmitted within the frame are referred to the middle of tb. Duration of the time interval and therefore the maximum value of tb depends on the value of the flag P1;

$\gamma_n(t_b)$ = the relative deviation of predicted carrier frequency value of n-satellite from the nominal value at the instant t_b, i.e.

where

$f_n(t_b)$ = the forecast frequency of n-satellite clocks at an instant tb;

f_{Hn} = the nominal value of frequency of n-satellite clocks;

$\tau_n(t_b)$ = the correction to the n-satellite time tn relative to GLONASS time tc at an instant t_b,i.e. $\tau_n(t_b) = t_c(t_b) – t_n(t_b)$;

$x_n(t_b)$, $y_n(t_b)$, $z_n(t_b)$ = the coordinates of n-satellite in PZ-90 coordinate system at an instant tb;

$\dot{x}_n(t_b)$, $\dot{y}_n(t_b)$, $\dot{z}_n(t_b)$ = the velocity vector components of n-satellite in PZ-90 coordinate system at an instant t_b;

$\ddot{x}_n(t_b)$, $\ddot{y}_n(t_b)$, $\ddot{z}_n(t_b)$ = the acceleration components of n-satellite in PZ-90 coordinate system at an instant tb, which are caused by effect of sun and moon;

E_n = an indication of the “age” of the immediate information, i.e. a time interval elapsed since the instant of its calculation (uploading) until the instant t_b for n-satellite;

B_n = the health flag. Values greater than 3 indicate the fact of malfunction of given satellite;

P1 = a flag indicating the time interval between the current and previous value of the t_b parameters in minutes as shown:

P1	Time interval between adjacent values of t_b in minutes
0	0
1	30
10	45
11	60

P2 = a flag indicating whether the value of t_b is odd or even. A value of "1" indicates a 30-minute interval of service information transmit (t_b = 1, 3, 5 …), a value of "0" indicates a 60-minute interval of service information transmit (t_b = 2, 6, 10 …);

P3 = a flag indicating the number of satellites for which an almanac is transmitted within a given frame. "1" corresponds to 5 satellites and "0" corresponds to 4 satellites; and

Δτn = the time difference between the navigation RF signal transmitted in L2 sub-band and navigation RF signal transmitted in L1 sub-band by given satellite:

$$\Delta\tau_n = t_{f2} - t_{f1}$$

where t_{f1}, t_{f2} are the equipment delays in L1 and L2 sub-bands respectively, expressed in units of time.

3.2.1.3.2 *Ephemeris and time parameters*. The ephemeris and time parameters shall be as indicated in Table 17. For the words for which numeric values may be positive or negative, the MSB shall be the sign bit. The chip "0" shall correspond to the "+" sign and the chip "1" shall correspond to the "–" sign.

3.2.1.3.3 *Arrangement of the ephemeris and time parameters.* Arrangements of the ephemeris and time parameters within a frame shall be as indicated in Table 18.

3.2.1.3.4 *Almanac parameters.* The almanac parameters shall be as follows:

A = an index showing relation of this parameter with the almanac;

MAn = an index of the modification of nA-satellite: "00" indicates GLONASS satellite, and "01" indicates GLONASS-M satellite;

τ_c = the GLONASS time scale correction to UTC(SU) time. The correction τc is given at the instant of day N^A;

N_A = the calendar day number within the 4-year period beginning since the leap year. The correction τc and other almanac data (almanac of orbits and almanac of phases) relate to this day number;

n_A = the slot number occupied by n-satellite;

H_{An} = the channel number of a carrier frequency of n^A-satellite (Table 16);

λAn = the longitude of the first (within the N^A-day) ascending node of n^A-satellite orbit in PZ-90 coordinate system;

tλAn = the time of the first ascending node passage of n^A-satellite within N^A-day;

Table 17. Ephemeris and time parameters

Parameter	Number of bits	Scale factor (LSB)	Effective range	Units
m	4	1		dimensionless
	5	1	0 to 23	hours
tk	6	1	0 to 59	minutes
	1	30	0 or 30	seconds
tb	7	15	15...1 425	minutes
γn(tb)	11	2^{-40}	$\pm 2^{-30}$	dimensionless
τn(tb)	22	2^{-30}	$\pm 2^{-9}$	seconds
xn(tb), yn(tb), zn(tb)	27	2^{-11}	$\pm 2.7 \times 10^{4}$	km
$\dot{x}n$ (tb), $\dot{y}n$ (tb), $\dot{z}n$ (tb)	24	2^{-20}	±4.3	km/second
$\ddot{x}n$ (tb), $\ddot{y}n$ (tb), $\ddot{z}n$ (tb)	5	2^{-30}	$\pm 6.2 \times 10^{-9}$	km/second^2
En	5	1	0 to 31	days
Bn	3	1	0 to 7	dimensionless
P1	2	———	as detailed in 3.2.1.3.1	———
P2	1	1	0; 1	dimensionless
P3	1	1	0; 1	dimensionless
Δτn	5	2–30	$\pm 13.97 \times 10^{-9}$	seconds

Table 18. Arrangements of the ephemeris and time parameters within the frame

Parameter	Number of bits	String number within the frame	Bit number within the frame
m	4	1...15	81 – 84
tk	12	1	65 – 76
tb	7	2	70 – 76
γn(tb)	11	3	69 – 79
τn(tb)	22	4	59 – 80
xn(tb)	27	1	9 – 35
yn(tb)	27	2	9 – 35
zn(tb)	27	3	9 – 35
$\dot{x}n(tb)$	24	1	41 – 64
$\dot{y}n(tb)$	24	2	41 – 64
$\dot{z}n(tb)$	24	3	41 – 64
$\ddot{x}n(tb)$	5	1	36 – 40
$\ddot{y}n(tb)$	5	2	36 – 40
$\ddot{z}n(tb)$	5	3	36 – 40
En	5	4	49 – 53
Bn	3	2	78 – 80
P1	2	1	77 – 78
P2	1	2	77
P3	1	3	80
Δτn	5	4	54 – 58

Δi^A_n = the correction to the mean value of inclination of n^A-satellite at instant of $t_\lambda{}^A_n$ (mean value of inclination is equal to 63 degrees);

ΔT^A_n = the correction to the mean value of Draconian period of the n^A-satellite at the instant of $t_\lambda{}^A_n$ (mean value of Draconian period T is equal to 43 200 seconds);

$\Delta T'^A_n$ = the rate of change of Draconian period of n^A-satellite;

εAn= the eccentricity of n^A-satellite at instant of $t_\lambda{}^A_n$;

ωAn= the argument of perigee of n^A-satellite at the instant of $t_\lambda{}^A_n$;

τAn= the coarse value of n^A-satellite time correction to GLONASS time at instant of $t_\lambda{}^A_n$;

CAn= a generalized “unhealthy flag” of n^A-satellite at instant of almanac upload almanac of orbits and phases. When Cn = 0, this indicates that n-satellite is non-operational. When Cn = 1, this indicates that n-satellite is operational.

3.2.1.3.5 *Partition and coding of almanac parameters*. The GLONASS almanac, transmitted within the superframe, shall be partitioned over the superframe, as indicated in Table 19. The numeric values of almanac parameters shall be positive or negative. The MSB shall be the sign bit, the chip “0” shall correspond to the “+” sign, and the chip “1” shall correspond to the “–” sign. The almanac parameters shall be coded as indicated in Table 20.

3.2.1.3.6 *Arrangement of the almanac parameters*. Arrangement of the almanac words within the frame shall be as indicated in Table 21.

3.2.1.4 *CONTENT AND STRUCTURE OF ADDITIONAL DATA TRANSMITTED BY GLONASS-M SATELLITES*

3.2.1.4.1 *Letter designation of additional data.* In addition to the GLONASS data, GLONASS-M satellites shall transmit the following additional data as indicated in Table 17-A:

n — an index of the satellite transmitting the given navigation signal: it corresponds to a slot number within GLONASS constellation;

l_n — health flag for n-th satellite: “0” indicates the n-th satellite is healthy, “1” indicates the malfunction of the n-th satellite;

B1 — coefficient to determine ΔUT1: it is equal to the difference between UT1 and UTC at the beginning of the day (N^A), expressed in seconds;

B2 — coefficient to determine ΔUT1: it is equal to the daily change of the difference ΔUT1 (expressed in seconds for a mean sun day).

These coefficients shall be used to transform between UTC(SU) and UT1:

ΔUT1= UTC(SU) – UT1,

where

UT1 — Universal Time referenced to the Mean Greenwich Meridian (taking account of Pole motion),

UTC(SU) — Coordinated Universal Time of the Russian Federation State Standard,

$$\Delta UT1 = B1 + B2 \times (N_T - N^A),$$

KP — notification of a forthcoming leap second correction of UTC (±1 s) as shown:

KP	UTC second correction data
00	No UTC correction at the end of the current quarter
01	UTC correction by plus 1 s at the end of the current quarter
11	UTC correction by minus 1 s at the end of the current quarter

Note: *GLONASS system timescale correction is usually performed once a year at midnight 00 hours 00 minutes 00 seconds in accordance with the early notification of the International Time Bureau (BIH/BIPM) at the end of a quarter:*
from 31 December to 1 January — first quarter,
from 31 March to 1 April — second quarter,
from 30 June to 1 July — third quarter,
from 30 September to 1 October — fourth quarter.

N_T — current date, calendar number of the day within the four-year interval starting from 1 January in a leap year;

Note: *An example of NT transformation into the common form of current data information (dd/mm/yy) is presented in GM on application GNSS standards and recommended practices, 4.2.7.1.*

N_4 — four-year interval number starting from 1996;

F_T — a parameter that provides the predicted satellite user range accuracy at time t_b. Coding is as indicated in Table 17-B;

M — type of satellite transmitting the navigation signal. 00 refers to a GLONASS satellite; 01 refers to a GLONASS-M satellite;

P_4 — flag to show that updated ephemeris parameters are present. “1” indicates that an updated ephemeris or frequency/time parameters have been uploaded by the control segment;

Note: *Updated ephemeris or frequency/time information is transmitted in the next interval after the end of the current interval t_b.*

P — technological parameter of control segment indicating the satellite operation mode in respect of time parameters:

00 — τ_c parameter relayed from control segment, τ_{GPS} parameter relayed from control segment;

01 — τ_c parameter relayed from control segment, τ_{GPS} parameter calculated on-board the GLONASS-M satellite;

10 — τ_c parameter calculated on-board the GLONASS-M satellite; τ_{GPS} parameter relayed from control segment;

11 — τ_c parameter calculated on-board the GLONASS-M satellite; τ_{GPS} parameter calculated on-board the GLONASS-M satellite

τ_{GPS} — correction to GPS time relative to GLONASS time:

$$T_{GPS} - T_{GL} = \Delta T + \tau_{GPS},$$

where ΔT is the integer part, and τ_{GPS} is the fractional part of the difference between the system timescales expressed in seconds.

Note: *The integer part ΔT is determined from the GPS navigation message by the user receiver.*

M^A_n — type of satellite n^A: coding "00" indicates a GLONASS satellite, coding "01" indicates a GLONASS-M satellite.

3.2.1.4.2 *Additional data parameters.* Additional data parameters are defined in Tables 17-A to 18-A.

3.2.1.4.3 *Location of additional data words within GLONASS-M navigation message.* The required location of additional data words within the GLONASS-M navigation message is defined in Table 18-A.

Table 17-A. Additional data parameters

Parameter	No. of bits	Scale factor (LSB)	Effective range	Units
n	5	1	0 to 31	Dimensionless
l_n	1	1	0; 1	Dimensionless
B1	11	2^{-10}	±0.9	seconds
B2	10	2^{-16}	(–4.5 to 3.5) × 10^{-3}	s/mean sun day
KP	2	1	0 to 3	Dimensionless
N_t	11	1	0 to 1 461	days
N_4	5	1	1 to 31	four-year interval
F_T	4		See table 17-B	
M	2	1	0 to 3	Dimensionless
P4	1	1	0; 1	Dimensionless
P	2	1	00,01,10,11	Dimensionless
τ_{GPS}	22	2^{-30}	±1.9 × 10^{-3}	seconds
M^A_n	2	1	0 to 3	Dimensionless

Table 17-B. F_T word coding

F_T value	Pseudorange accuracy, 1 sigma (m)
0	1
1	2
2	2.5
3	4
4	5
5	7
6	10
7	12
8	14
9	16
10	32
11	64
12	128
13	256
14	512
15	Not used

Table18-A. Location of additional data words within the GLONASS-M navigation message

Word	Number of bits	String number within thesuperframe	Bit number within the string
n	5	4, 19, 34, 49, 64	11 – 15
ln	1	5, 7, 9, 11, 13, 15, 20, 22, 24, 26, 28, 30, 35, 37, 39, 41, 43, 45, 50, 52, 54, 56, 58, 60, 65, 67, 69, 71, 73, 75	9
		3, 18, 33, 48, 63	65
B1	11	74 (within the superframe)	70 – 80
B2	10	74 (within the superframe)	60 – 69
KP	2	74 (within the superframe)	58 – 59
NT	11	4, 19, 34, 49, 64	16 – 26
N4	5	5, 20, 35, 50, 65	32 – 36
FT	4	4, 19, 34, 49, 64	30 – 33
M	2	4, 19, 34, 49, 64	9 – 10
P4	1	4, 19, 34, 49, 64	34
P	2	3, 18, 33, 48, 63	66 – 67
I_{GPS}	22	5, 20, 35, 50, 65	10 – 31
M^A_n	2	6, 8, 10, 12, 14	78 – 79

Table 19. Almanac partition within the superframe

Frame number within the superframe	Satellite numbers, for which almanac is transmitted within given frame
1	1 to 5
2	6 to 10
3	11 to 15
4	16 to 20
5	21 to 24

Table 20. Almanac parameters coding

Parameter	Number of bits	Scale factor (LSB)	Effective range	Units
MAn	2	1	0 to 3	dimensionless
τc	28	2^{-27}	±1	seconds
N^A	11	1	1 to 1 461	days
n^A	5	1	1 to 24	dimensionless
H^A_n	5	1	0 to 31	dimensionless
λ^A_n	21	2^{-20}	±1	semi-circles
$t_{\lambda}{}^A_n$	21	2^{-5}	0 to 44 100	seconds
Δi^A_n	18	2^{-20}	±0.067	semi-circles
ΔT^A_n	22	2^{-9}	$\pm 3.6 \times 10^3$	seconds/revolution
$\Delta T'^A_n$	7	2^{-14}	$\pm 2^{-8}$	seconds/revolution^2
ε^A_n	15	2^{-20}	0 to 0.03	dimensionless
ω^A_n	16	2^{-15}	±1	semi-circles
$t_\tau{}^A_n$	10	2^{-18}	$\pm 1.9 \times 10^{-3}$	seconds
C^A_n	1	1	0 to 1	dimensionless

Table 21. Arrangement of almanac parameters within the frame

Parameter	Number of bits	String number within the frame	Bit number within the string
M^A_n	2	6, 8, 10, 12, 14	78 – 79
τ_c	28	5	42 – 69
N^A	11	5	70 – 80
n^A	5	6, 8, 10, 12, 14	73 – 77
H^A_n	5	7, 9, 11, 13, 15	10 – 14
λ^A_n	21	6, 8, 10, 12, 14	42 – 62
$t\lambda^A_n$	21	7, 9, 11, 13, 15	44 – 64
Δi^A_n	18	6, 8, 10, 12, 14	24 – 41
ΔT^A_n	22	7, 9, 11, 13, 15	22 – 43
$\dot{\Delta T}^A_n$	7	7, 9, 11, 13, 15	15 – 21
ε^A_n	15	6, 8, 10, 12, 14	9 – 23
ω^A_n	16	7, 9, 11, 13, 15	65 – 80
$t\tau^A_n$	10	6, 8, 10, 12, 14	63 – 72
C^{An}	1	6, 8, 10, 12, 14	80

Note: *String numbers of the first four frames within superframe are given. There are no almanac parameters in 14th and 15th strings of 5th frame.*

3.2.2 DEFINITIONS OF PROTOCOLS FOR DATA APPLICATION

Note: *This section defines the inter-relationships of the data broadcast message parameters. It provides definitions of parameters that are not transmitted, but are used by either or both non-aircraft and aircraft elements, and that define terms applied to determine the navigation solution and its integrity.*

Table 22. Parity checking algorithm

b85, b84, …, b10, b9 are the data bits (position 9 to 85 in the string);

β1, β2, ..., ß8 are the check bits of the Hamming code (positions 1 to 8 in the string);

c1, c2, ..., c7, cΣ are the checksums generated using the following:

c1 = β ⊕ [Σi bi]mod 2
i = 9, 10, 12, 13, 15, 17, 19, 20, 22, 24, 26, 28, 30, 32, 34, 35, 37, 39, 41, 43, 45, 47, 49, 51, 53,

55, 57, 59, 61, 63, 65, 66, 68, 70, 72, 74, 76, 78, 80, 82, 84.

c2 = β 2 ⊕ [Σj bj]mod 2
j = 9, 11, 12, 14, 15, 18, 19, 21, 22, 25, 26, 29, 30, 33, 34, 36, 37, 40, 41, 44, 45, 48, 49, 52, 53, 56, 57, 60, 61, 64, 65, 67, 68, 71, 72, 75, 76, 79, 80, 83, 84.

c3 = β 3 ⊕ [Σk bk]mod 2
k = 10, 11, 12, 16, 17, 18, 19, 23, 24, 25, 26, 31, 32, 33, 34, 38, 39, 40, 41, 46, 47, 48, 49, 54, 55, 56, 57, 62, 63, 64, 65, 69, 70, 71, 72, 77, 78, 79, 80, 85.

$c_4 = \beta_4 \oplus [\Sigma_l b_l]_{mod\ 2}$
l = 13, 14, 15, 16, 17, 18, 19, 27, 28, 29, 30, 31, 32, 33, 34, 42, 43, 44, 45, 46, 47, 48, 49, 58, 59, 60, 61, 62, 63, 64, 65, 73, 74, 75, 76, 77, 78, 79, 80.

$c_5 = \beta_5 \oplus [\Sigma m\ bm\ ]mod\ 2$
m = 20, 21, 22, 23, 24, 25, 26, 27, 28, 29, 30, 31, 32, 33, 34, 50, 51, 52, 53, 54, 55, 56, 57, 58, 59, 60, 61, 62, 63, 64, 65, 81, 82, 83, 84, 85.

c6 = β 6 ⊕ [Σn bn]mod 2
n = 35, 36, 37, 38, 39, 40, 41, 42, 43, 44, 45, 46, 47, 48, 49, 50, 51, 52, 53, 54, 55, 56, 57, 58, 59, 60, 61, 62, 63, 64, 65.

c7 = β 7 ⊕ [Σp bp]mod 2
p = 66, 67, 68, 69, 70, 71, 72, 73, 74, 75, 76, 77, 78, 79, 80, 81, 82, 83, 84, 85.

cΣ = [Σ β q] mod 2 ⊕ [Σ br]mod 2
q = 1, 2, 3, 4, 5, 6, 7, 8
r = 9, 10, 11, 12, 13, 14, 15, 16, 17, 18, 19, 20, 21, 22, 23, 24, 25, 26, 27, 28, 29, 30, 31, 32, 33, 34, 35, 36, 37, 38, 39, 40, 41, 42, 43, 44, 45, 46, 47, 48, 49, 50, 51, 52, 53, 54, 55, 56, 57, 58, 59, 60, 61, 62, 63, 64, 65, 66, 67, 68, 69, 70, 71, 72, 73, 74, 75, 76, 77, 78, 79, 80, 81, 82, 83, 84, 85.

3.2.2.1 *Parity checking algorithm for data verification.* The algorithm shown in Table22 and as detailed below is used to detect and correct an error of 1 bit within the string and to detect an error of 2 or more bits within a string.

3.2.2.1.1 Each string includes the 85 data bits where the 77 MSBs are data chips (b_{85}, b_{84}, …, b_{10}, b_9), and the 8 LSBs are the check bits of Hamming code length of 4 (β_8, β_7, …, β_2, β_1).

3.2.2.1.2 To correct 1-bit errors within the string the following checksums are generated: (c_1, c_2, …, c_7), and to detect 2-bit errors (or more-even-number-of-bits errors) a checksum c_Σ is generated, as shown in Table 22. The following is used for correcting single errors and detecting multiple errors:

a) A string is considered correct if all checksums (c_1, ..., c_7, and cΣ) are equal to "0", or if only one of the checksums (c_1, ..., c_7) is equal to "1" and c_Σ is equal to "1".

b) If two or more of the checksums (c_1, ..., c_7) are equal to "1" and cΣ is equal to "1", then character "b_{icor}" is corrected to the opposite character in the following bit position:

$$\text{“}i_{cor}\text{”} = c_7\, c_6\, c_5\, c_4\, c_3\, c_2\, c_1 + 8 - K, \text{ provided that “}i_{cor}\text{”} \le 85,$$

where "$c_7\, c_6\, c_5\, c_4\, c_3\, c_2\, c_1$" is a binary number generated from the checksums (c_1, ..., c_7) with c_1 being the LSB and c_7 being the MSB. K is the ordinal number of the most significant checksum not equal to "0".

If $i_{cor} > 85$, then there is an odd number of multiple errors, and the data shall be rejected.

c) If at least one of the checksums (c1, ..., c7) is equal to "1" and cΣ is equal to "0", or if all checksums (c1, ..., c7) are equal to "0" but cΣ is equal to "1", then there are multiple errors and the data shall be rejected.

3.2.2.2 SATELLITE CLOCK CORRECTION PARAMETERS

3.2.2.2.1 GLONASS system time is determined as:

$$t_{GLONASS} = t_k + \tau_n(t_b) - \gamma_n(t_b)\,(t_k - t_b)$$

where t_k, $\tau_n(t_b)$, $\gamma_n(t_b)$ are parameters described in 3.2.1.3.1.

3.2.2.2.2 GLONASS time is related to National Time Service of Russia (UTC(SU)) time as indicated below:

$$t_{UTC(SU)} = t_{GLONASS} + \tau_c - 03 \text{ hours } 00 \text{ minutes}$$

where τc is a parameter described in 3.2.1.3.4 and 03 hours 00 minutes is continuous time shift caused by difference between Moscow time and Greenwich time.

3.2.2.3 SATELLITE POSITION

3.2.2.3.1 The current satellite position is defined using ephemeris parameters from GLONASS navigation, as indicated and in Table 17.

3.2.2.3.2 Recalculation of ephemeris from instant t_b to instant ti within the interval ($|\tau_i| = |t_i - t_b| \le$ 15 minutes) is performed using a technique of numeric integration of differential equations describing the motion of the satellites. In the right-hand parts of these equations the accelerations are determined using the gravitational constant μ and the second zonal harmonic of the geopotential J_{20} which defines polar flattening of the

earth, and accelerations due to luni-solar perturbation are taken into account. The equations are integrated in the PZ-90 (3.2.5) coordinate system by applying the Runge-Kutta technique of fourth order, as indicated below:

$$\frac{dx}{dt} = V_x$$

$$\frac{dy}{dt} = V_y$$

$$\frac{dz}{dt} = V_z$$

$$\frac{dVx}{dt} = -\frac{\mu}{r^3}x - \frac{3}{2}J_0^2\frac{\mu a_e^2}{r^5}x\left(1-\frac{5z^2}{r^2}\right) + \omega^2 x + 2\omega V_y + \ddot{x}$$

$$\frac{dV_y}{dt} = -\frac{\mu}{r^3}y - \frac{3}{2}J_0^2\frac{\mu a_e^2}{r^5}y\left(1-\frac{5z^2}{r^2}\right) + \omega^2 y + 2\omega V_x + \ddot{y}$$

$$\frac{dV_z}{dt} = -\frac{\mu}{r^3}z - \frac{3}{2}J_0^2\frac{\mu a_e^2}{r^5}z\left(1-\frac{5z^2}{r^2}\right) + \ddot{z}$$

where

$$\mathbf{r} = \sqrt{x^2 + y^2 + z^2}\ ;$$

μ = earth's universal gravitational constant (398 600.44 × 10^9 m_3/s_2);

a_e = major semi-axis (6 378 136 m);

J^2_0 = second zonal harmonic of the geopotential (1 082 625.7 × 10^{-9}); and

ω = earth's rotation rate (7.292115 × 10^{-5} radians/s).

Coordinates xn(tb), yn(tb), zn(tb), and velocity vector components $\dot{x}_n$ (tb) = Vx, $\dot{y}_n$ (tb) = V_y, $\dot{z}_n$ (t_b) = V_z are initial conditions for the integration. Accelerations due to luni-solar perturbation $\ddot{x}_n$ (t_b), $\ddot{y}_n$(tb), $\ddot{z}_n$ (t_b) are constant on the integration interval ±15 minutes.

3.2.3 AIRCRAFT ELEMENTS

3.2.3.1 *GNSS (GLONASS) RECEIVER*

3.2.3.1.1 *Satellite exclusion*. The receiver shall exclude any satellite designated unhealthy in the GLONASS navigation message.

3.2.3.1.2 *Satellite tracking.* The receiver shall provide the capability to continuously track a minimum of four satellites and generate a position solution based upon those measurements.

3.2.3.1.3 *Doppler shift.* The receiver shall be able to compensate for dynamic Doppler shift effects on nominal GLONASS signal carrier phase and standard code measurements. The receiver shall compensate for the Doppler shift that is unique to the anticipated application.

3.2.3.1.4 *Resistance to interference.* The receiver shall meet the requirements for resistance to interference as specified in 3.7.

3.2.3.1.4.1 *Intrasystem interference.* When receiving a navigation signal with frequency channel k = n, the interference created by a navigation signal with frequency channel number k = n – 1 or k = n + 1 shall not be more than –48 dBc with respect to the minimum specified satellite power at the surface of the earth provided that the satellites transmitting these signals are simultaneously located in user's visibility zone.

Note: *The intrasystem interference is the intercorrelation properties of the ranging pseudo-random signal with regard to frequency division multiple access.*

3.2.3.1.5 *Application of clock and ephemeris data.* The receiver shall ensure that it is using the correct ephemeris and clock data before providing any position solution.

3.2.3.1.6 *Leap second correction.* Upon GLONASS time leap second correction (see 3.2.1.3.1, t_b) the GLONASS receiver shall be capable of:

a) generating a smooth and valid series of pseudo-range measurements; and

b) resynchronizing the data string time mark without loss of signal tracking.

3.2.3.1.6.1 After GLONASS time leap second correction the GLONASS receiver shall utilize the UTC time as follows:

a) utilize the old (prior to the correction) UTC time together with the old ephemeris (transmitted before 00 hours 00 minutes 00 seconds UTC); and

b) utilize the updated UTC time together with the new ephemeris (transmitted after 00 hours 00 minutes 00 seconds UTC).

3.2.4 TIME

3.2.4.1 For the GLONASS-M satellites, the navigation message shall contain the data necessary to relate UTC(SU) time to UT1. GLONASS time shall be maintained to be within 1 millisecond of UTC(SU) time after correction for the integer number of hours due to GLONASS control segment specific features:

$$\mathbf{| t_{GLONASS} - (UTC + 03\ hours\ 00\ minutes) | < 1\ ms}$$

The navigation data shall contain the requisite data to relate GLONASS time to UTC time (as maintained by the National Time Service of Russia, UTC (SU)) within 1 microsecond.

Note 1: *The timescales of GLONASS satellites are periodically compared with central synchronizer time. Corrections to the timescales of GLONASS satellites relative to GLONASS time and UTC(SU) time are computed at the GLONASS ground-based control complex and uploaded to the satellites twice per day.*

Note 2: *There is no integer-second difference between GLONASS time and UTC time. The GLONASS timescale is periodically corrected to integer number of seconds simultaneously*

with UTC corrections which are performed according to the Bureau International de l'Heure notification (leap second correction). These corrections are performed at 00 hours 00 minutes 00 seconds UTC time at midnight at the end of a quarter of the year. Upon the GLONASS leap second correction the time mark within navigation message changes its position (in a continuous timescale) to become synchronized with 2-second epochs of corrected UTC timescale. GLONASS users are notified in advance on these planned corrections. For the GLONASS-M satellites, notification of these corrections is provided to users via the navigation message parameter KP.

3.2.4.2 Accuracy of mutual satellite timescales synchronization shall be 20 nanoseconds (1 sigma) for GLONASS satellites and 8 nanoseconds (1 sigma) for GLONASS-M satellites.

3.2.4.3 The correction to GPS time relative to GLONASS time (or difference between these timescales) broadcast by the GLONASS-M satellites, τ_{GPS}, shall not exceed 30 nanoseconds (1 sigma).

Note: *The accuracy of τ_{GPS} (30 ns) is determined with reference to the GPS SPS coarse acquisition signal and may be refined upon completion of trials of the GLONASS system using GLONASS-M satellites.*

3.2.5 COORDINATE SYSTEM

3.2.5.1 *PZ-90 (Parameters of common terrestrial ellipsoid and gravitational field of the earth 1990).* The GLONASS broadcast ephemeris shall describe a position of transmitting antenna phase centre of a given satellite in the PZ-90 earthcentred earth-fixed reference frame.

3.2.5.2 *CONVERSION BETWEEN PZ-90 AND WGS-84*

3.2.5.2.1 **Recommendation**. — *The following conversion parameters should be used to obtain position coordinates in WGS-84 (version G1674) from position coordinates in PZ-90 (Version PZ-90.11):*

$$\begin{bmatrix} X \\ Y \\ Z \end{bmatrix}_{WGS-84} = \begin{bmatrix} 1 & 0.0097 \times 10^{-9} & 0.2036 \times 10^{-9} \\ -0.0097 \times 10^{-9} & 1 & 0.0921 \times 10^{-9} \\ -0.2036 \times 10^{-9} & 0.0921 \times 10^{-9} & 1 \end{bmatrix} \times \begin{bmatrix} X \\ Y \\ Z \end{bmatrix}_{PZ-90} + \begin{bmatrix} 0.003 \\ 0.001 \\ 0 \end{bmatrix}$$

Note 1: *X, Y and Z are expressed in metres. The difference between versions WGS-84 (G1674) and PZ-90 (PZ-90.11) is not significant with respect to operational requirements.*

Note 2: *Information material on conversion between PZ-90 and WGS-84 is provided in GM on application GNSS standards and recommended practices, section 4.2.9.3.*

3.3 COMBINED USE OF GPS AND GLONASS

3.3.1 AIRCRAFT ELEMENTS

3.3.1.1 *Combined GNSS receiver*. The combined GNSS receiver shall process signals from GPS and GLONASS in accordance with the requirements specified in 3.1.3.1, GPS (GNSS) receiver, and 3.2.3.1, GLONASS (GNSS) receiver.

3.3.1.1.1 *Resistance to interference.* The combined GNSS receiver shall meet the individual requirements for GPS and GLONASS as specified in 3.7.

3.3.1.2 *Antenna(e)*. GPS and GLONASS signals shall be received through one or more antennae.

Note: *Performance characteristics of GNSS receiver antennae are defined in 3.8.*

3.3.1.3 *Conversion between coordinate systems*. Position information provided by a combined GPS and GLONASS receiver shall be expressed in WGS-84 earth coordinates.

3.3.1.3.1 **Recommendation. —** *The GLONASS satellite position, obtained in PZ-90 coordinate frame, should be converted to account for the differences between WGS-84 and PZ-90, as defined in 3.2.5.2.*

3.3.1.4 *GPS/GLONASS time*. When combining measurements from GLONASS and GPS, the difference between GLONASS time and GPS time shall be taken into account.

3.3.1.4.1 GPS/GLONASS receivers shall solve for the time offset between the core constellations as an additional unknown parameter in the navigation solution and not only rely on the time offset broadcast in the navigation messages.

3.4 AIRCRAFT-BASED AUGMENTATION SYSTEM (ABAS)

Note: *Guidance on ABAS is given in GM on application GNSS standards and recommended practices.*

3.5 SATELLITE-BASED AUGMENTATION SYSTEM (SBAS)

3.5.1 GENERAL

Note: *Parameters in this section are defined in WGS-84.*

3.5.2 RF CHARACTERISTICS

3.5.2.1 *Carrier frequency stability*. The short-term stability of the carrier frequency (square root of the Allan Variance) at the output of the satellite transmit antenna shall be better than 5×10^{-11} over 1 to 10 seconds.

3.5.2.2 *Carrier phase noise*. The phase noise spectral density of the unmodulated carrier shall be such that a phase locked loop of 10 Hz one-sided noise bandwidth is able to track the carrier to an accuracy of 0.1 radian (1 sigma).

3.5.2.3 *Spurious emissions*. Spurious emissions shall be at least 40 dB below the unmodulated carrier power over all frequencies.

3.5.2.4 *Code/carrier frequency coherence*. The short-term (less than 10 seconds) fractional frequency difference between the code phase rate and the carrier frequency shall be less than 5×10^{-11} (standard deviation). Over the long term (less than 100 seconds), the difference between the change in the broadcast code phase, converted to carrier cycles by multiplying the number of code chips by 1 540, and the change in the broadcast carrier phase, in cycles, shall be within one carrier cycle (standard deviation).

Note: *This applies to the output of the satellite transmit antenna and does not include code*/carrier *divergence due to ionospheric refraction in the downlink propagation path.*

3.5.2.5 *Correlation loss*. The loss in the recovered signal power due to imperfections in the signal modulation and waveform distortion shall not exceed 1 dB.

Note: *The loss in signal power is the difference between the broadcast power in a 2.046 MHz bandwidth and the signal power recovered by a noise-free, loss-free receiver with 1-chip correlator spacing and a 2.046 MHz bandwidth.*

3.5.2.6 *Maximum code phase deviation*. The maximum uncorrected code phase of the broadcast signal shall not deviate from the equivalent SBAS network time (SNT) by more than $\pm 2^{-20}$ seconds.

3.5.2.7 *Code/data coherence*. Each 2-millisecond symbol shall be synchronous with every other code epoch.

3.5.2.8 *Message synchronization*. The leading edge of the first symbol that depends on the first bit of the current message shall be broadcast from the SBAS satellite synchronous with a 1-second epoch of SNT.

3.5.2.9 *Convolutional encoding*. A 250-bit-per-second data stream shall be encoded at a rate of 2 symbols per bit using a convolutional code with a constraint length of 7 to yield 500 symbols per second. The convolutional encoder logic arrangement shall be as illustrated in Figure11 with the G3 output selected for the first half of each 4-millisecond data bit period.

3.5.2.10 *Pseudo-random noise (PRN) codes*. Each PRN code shall be a 1 023-bit Gold code which is itself the Modulo-2 addition of two 1 023-bit linear patterns, G1 and G2i. The G2i sequence shall be formed by delaying the G2 sequence by the associated integer number of chips as illustrated in Table 23. Each of the G1 and G2 sequences shall be defined as the output of stage 10 of a 10-stage shift register, where the input to the shift register is the Modulo-2 addition of the following stages of the shift register:

a) G1: stages 3 and 10; and

b) G2: stages 2, 3, 6, 8, 9 and 10.

The initial state for the G1 and G2 shift registers shall be “1111111111”.

Table 23. SBAS PRN codes

PRN code number	G2 delay (chips)	First 10 SBAS chips (Leftmost bit represents first transmitted chip, binary)
120	145	110111001
121	175	101011110
122	52	1101001000
123	21	1101100101
124	237	1110000
125	235	111000001
126	886	1011
127	657	1000110000
128	634	10100101
129	762	101010111
130	355	1100011110
131	1 012	1010010110
132	176	1010101111
133	603	100110
134	130	1000111001
135	359	101110001
136	595	1000011111
137	68	111111000
138	386	1011010111

3.5.3 DATA STRUCTURE

3.5.3.1 *Format summary*. All messages shall consist of a message type identifier, a preamble, a data field and a cyclic redundancy check as illustrated in Figure 12.

3.5.3.2 *Preamble.* The preamble shall consist of the sequence of bits “01010011 10011010 11000110”, distributed over three successive blocks. The start of every other 24-bit preamble shall be synchronous with a 6-second GPS subframe epoch.

3.5.3.3 *Message type identifier.* The message type identifier shall be a 6-bit value identifying the message type (Types 0 to 63) as defined in Table24. The message type identifier shall be transmitted MSB first.

3.5.3.4 *Data field*. The data field shall be 212 bits as defined in 3.5.6. Each data field parameter shall be transmitted MSB first.

3.5.3.5 *Cyclic redundancy check (CRC).* The SBAS message CRC code shall be calculated in accordance with 3.9.3.5.3.5.1 The length of the CRC code shall be k = 24 bits.

3.5.3.5.1 The length of the CRC code shall be k = 24 bits.

3.5.3.5.2 The CRC generator polynomial shall be:

$$G(x) = x^{24} + x^{23} + x^{18} + x^{17} + x^{14} + x^{11} + x^{10} + x^{7} + x^{6} + x^{5} + x^{4} + x^{3} + x + 1$$

Table 24. Broadcast message types

Message type	Contents
0	“Do Not Use” (SBAS test mode)
1	PRN mask
2 to 5	Fast corrections
6	Integrity information
7	Fast correction degradation factor
8	Spare
9	GEO ranging function parameters
10	Degradation parameters
11	Spare
12	SBAS network time/UTC offset parameters
13 to 16	Spare
17	GEO satellite almanacs
18	Ionospheric grid point masks
19 to 23	Spare
24	Mixed fast/long-term satellite error corrections
25	Long-term satellite error corrections
26	Ionospheric delay corrections
27	SBAS service message
28	Clock-ephemeris covariance matrix
29 to 61	Spare
62	Reserved
63	Null message

3.5.3.5.3 The CRC information field, M(x), shall be:

$$M(x)=\sum_{i=1}^{226} m_i x^{226-i} = m_1 x^{225} + m_2 x^{224} + \cdots + m_{226} x^0$$

3.5.3.5.4 M(x) shall be formed from the 8-bit SBAS message preamble, 6-bit message type identifier, and 212-bit data field. Bits shall be arranged in the order transmitted from the SBAS satellite, such that m1 corresponds to the first transmitted bit of the preamble, and m226 corresponds to bit 212 of the data field.

3.5.3.5.5 The CRC code r-bits shall be ordered such that r1 is the first bit transmitted and r24 is the last bit transmitted.

3.5.4 DATA CONTENT

3.5.4.1 PRN *mask parameters*. PRN mask parameters shall be as follows:

PRN code number: a number that uniquely identifies the satellite PRN code and related assignments as shown in Table 25.

PRN mask: 210 PRN mask values that correspond to satellite PRN code numbers. The mask shall set up to 51 of the 210 PRN mask values.

Note: *The first transmitted bit of the PRN mask corresponds to PRN code number 1.*

Table 25. PRN code number assignments

PRN code number	Assignment
1 – 37 38 – 61 62 – 119 120 – 138 139 – 210	GPS GLONASS slot number plus 37 Spare SBAS Spare

PRN mask value: a bit in the PRN mask indicating whether data are provided for the associated satellite PRN code number

(1 to 210).

Coding: 0 = data not provided
1 = data provided

PRN mask number: the sequence number (1 to 51) of the mask values set in the PRN mask.

Note: *The PRN mask number is "1" for the lowest satellite PRN number for which the PRN mask value is "1".*

Issue of data — PRN (IODP): an indicator that associates the correction data with a PRN mask.

Note: *Parameters are broadcast in the following messages:*

a) PRN mask (consisting of 210 PRN mask values) in Type 1 message;
b) PRN mask number in Type 24, 25 and 28 messages;
c) PRN code number in Type 17 message; and
d) IODP in Type 1 to 5, 7, 24, 25 and 28 messages.

3.5.4.2 *Geostationary orbit (GEO) ranging function parameters.* GEO ranging function parameters shall be as follows:

$t_{0,GEO}$*:* the reference time for the GEO ranging function data, expressed as the time after midnight of the current day.

$[X_G Y_G Z_G]$: the position of the GEO at time $t_{0,GEO}$.

$[\dot{X}_G \dot{Y}_G \dot{Z}_G]$: the velocity of the GEO at time $t_{0,GEO}$.

$[\ddot{X}_G \ddot{Y}_G \ddot{Z}_G]$: the acceleration of the GEO at time $t_{0,GEO}$.

*a*Gf0*:* the time offset of the GEO clock with respect to SNT, defined at $t_{0,GEO}$.

*a*Gf1*:* the drift rate of the GEO clock with respect to SNT.

User range accuracy (URA): an indicator of the root-mean-square ranging error, excluding atmospheric effects, as described in Table 26.

Note: *All parameters are broadcast in Type 9 message.*

Table 26. User range accuracy

URA	Accuracy (rms)
0	2 m
1	2.8 m
2	4 m
3	5.7 m
4	8 m
5	11.3 m
6	16 m
7	32 m
8	64 m
9	128 m
10	256 m
11	512 m
12	1 024 m
13	2 048 m
14	4 096 m
15	“Do Not Use”
Note: *URA values 0 to 14 are not used in the protocols for data application (3.5.5). Airborne receivers will not use the GEO ranging function if URA indicates “Do Not Use”(3.5.8.3).*	

3.5.4.3 *GEO almanac parameters.* GEO almanac parameters shall be as follows:

PRN code number: see 3.5.4.1.

Health and status: an indication of the functions provided by the SBAS. The service provider identifiers are shown in Table 27.

Coding:

Bit 0 (LSB)	Ranging	On (0) Off (1)
Bit 1	Precision corrections	On (0) Off (1)
Bit 2	Satellite status and basic corrections	On (0) Off (1)
Bits 3	Spare	
Bits 4 to 7	Service provider identifier	

Note: *A service provider ID of 14 is used for GBAS and is not applicable to SBAS.*

$[X_{G,A}Y_{G,A}Z_{G,A}]$*:* the position of the GEO at time $t_{almanac}$.

$[\dot{X}_{G,A}\dot{Y}_{G,A}\dot{Z}_{G,A}]$*:* the velocity of the GEO at time $t_{almanac}$.

$t_{almanac}$*:* the reference time for the GEO almanac data, expressed as the time after midnight of the current day.

Note: *All parameters are broadcast in Type 17 message.*

3.5.4.4 *SATELLITE CORRECTION BROADCAST PARAMETERS*

3.5.4.4.1 Long-term correction parameters shall be as follows:

Issue of data (IOD_i): an indicator that associates the long-term corrections for the ith satellite with the ephemeris data broadcast by that satellite.

Note 1: *For GPS, the IOD_i matches the IODE and 8 LSBs of the IODC (3.1.1.3.1.4 and 3.1.1.3.2.2).*

Note 2: *For GLONASS, the IOD_i indicates a period of time that GLONASS data are to be used with SBAS data. It consists of two fields as shown in Table 28.*

δx_i*:* for satellite i, the ephemeris correction for the x axis.

δy_i*:* for satellite i, the ephemeris correction for the y axis.

δz_i*:* for satellite i, the ephemeris correction for the z axis.

$\delta a_{i,f0}$*:* for satellite i, the ephemeris time correction.

$\delta\dot{x}_i$*:* for satellite i, ephemeris velocity correction for x axis.

$\delta\dot{y}_i$*:* for satellite i, ephemeris velocity correction for y axis.

$\delta\dot{z}_i$*:* for satellite i, ephemeris velocity correction for z axis.

$\delta a_{i,f1}$*:* for satellite i, rate of change of the ephemeris time correction.

$t_{i,LT}$*:* the time of applicability of the parameters δxi, δyi, δzi, δai,f0, $\delta\dot{x}_i$, $\delta\dot{y}_i$, $\delta\dot{z}_i$ and δai,f1, expressed in seconds after midnight of the current day.

Velocity code: an indicator of the message format broadcast (Table48 and Table 49).

Coding: 0 = $\delta\dot{x}_i$, $\delta\dot{y}_i$, $\delta\dot{z}_i$ and $\delta a_{i,f1}$ are not broadcast.

1 = $\delta\dot{x}_i$, $\delta\dot{y}_i$, $\delta\dot{z}_i$ and $\delta a_{i,f1}$ are broadcast.

Note: *All parameters are broadcast in Type 24 and 25 messages.*

Table 27. SBAS service provider identifiers

Identifier	Service provider
0	WAAS
1	EGNOS
2	MSAS
3	GAGAN
4	SDCM
5	BDSBAS
6	KASS
7	A-SBAS
8	SPAN
9 to13	Spare
14, 15	Reserved

Table 28. IODi for GLONASS satellites

MSB	LSB
Validity interval (5 bits)	Latency time (3 bits)

3.5.4.4.2 Fast correction parameters shall be as follows:

Fast correction (FC_i): for satellite *i*, the pseudo-range correction for rapidly varying errors, other than tropospheric or ionospheric errors, to be added to the pseudo-range after application of the long-term correction.

Note: *The user receiver applies separate tropospheric corrections (3.5.8.4.2 and 3.5.8.4.3).*

Fast correction type identifier: an indicator (0, 1, 2, 3) of whether the Type 24 message contains the fast correction and integrity data associated with the PRN mask numbers from Type 2, Type 3, Type 4 or Type 5 messages, respectively.

Issue of data-fast correction (IODFj): an indicator that associates UDREIis with fast corrections. The index *j* shall denote the message type (j = 2 to 5) to which IODFj applies (the fast correction type identifier +2).

Note: *The fast correction type identifier is broadcast in Type 24 messages. The FC_i are broadcast in Type 2 to 5, and Type 24 messages. The $IODF_j$ are broadcast in Type 2 to 6, and Type 24 messages.*

3.5.4.5 *Fast and long-term correction integrity parameters*. Fast and long-term correction integrity parameters shall be as follows:

$UDREI_i$: an indicator that defines the $\sigma^2_{i,UDRE}$ for satellite *i* as described in Table 29.

Model variance of residual clock and ephemeris errors ($\sigma^2_{i,UDRE}$): the variance of a normal distribution associated with the user differential range errors for satellite *i* after application of fast and long-term corrections, excluding atmospheric effects and used in horizontal protection level/vertical protection level computations (3.5.5.6).

Note: *All parameters are broadcast in Type 2 to 6, and Type 24 messages.*

3.5.4.6 *Ionospheric correction parameters.* Ionospheric correction parameters shall be as follows:

IGP mask: a set of 11 ionospheric grid point (IGP) band masks defined in Table30.

IGP band mask: a set of IGP mask values which correspond to all IGP locations in one of the 11 IGP bands defined in Table 30.

Table 29. Evaluation of $UDREI_i$

$UDREI_i$	$\sigma^2_{i,UDRE}$
0	0.0520 m^2
1	0.0924 m^2
2	0.1444 m^2
3	0.2830 m^2
4	0.4678 m^2
5	0.8315 m^2
6	1.2992 m^2
7	1.8709 m^2
8	2.5465 m^2
9	3.3260 m^2
10	5.1968 m^2
11	20.7870 m^2
12	230.9661 m^2
13	2 078.695 m^2
14	“Not Monitored”
15	“Do Not Use”

IGP mask value: a bit indicating whether data are provided within that IGP band for the associated IGP.

Coding: 0 = data are not provided
1 = data are provided

Number of IGP bands: the number of IGP band masks being broadcast.

IGP band identifier: the number identifying the ionospheric band as defined in Table 30.

IGP block identifier: the identifier of the IGP block. The IGP blocks are defined by dividing into groups of 15 IGPs the sequence of IGPs within an IGP band mask which have IGP mask values of “1”. The IGP blocks are numbered in an order of IGP mask value transmission, starting with “0”.

Validity interval (V): the time interval for which the GLONASS ephemeris data are applicable (coded with an offset of 30 s) as described in Table 31.

Latency time (L): the time interval between the time the last GLONASS ephemeris has been received by the ground segment and the time of transmission of the first bit of the long-term correction message at the GEO(t_{ltc}) as described in Table 32.

$IODI_k$: an indication of when the kth IGP band mask changes.

IGP vertical delay estimate: an estimate of the delay induced for a signal at 1 575.42 MHz if it traversed the ionosphere vertically at the IGP.

Coding: The bit pattern “111111111” indicates “Do Not Use”.

$GIVEI_i$: an indicator that defines the $\sigma^2_{i,GIVE}$ as described in Table 33.

Model variance of residual ionospheric errors ($\sigma^2_{i,GIVE}$): the variance of a normal distribution associated with the residual ionospheric vertical error at the IGP for an L1 signal.

Note: *All parameters are broadcast in Type 18 and Type 26 messages.*

Table 30. IGP locations and band numbers

IGP location		Transmission order in IGP band mask
Band 0		
180 W	75S, 65S, 55S, 50S, 45S, ..., 45N, 50N, 55N, 65N, 75N, 85N	1 – 28
175 W	55S, 50S, 45S, ..., 45N, 50N, 55N	29 – 51
170 W	75S, 65S, 55S, 50S, 45S, ..., 45N, 50N, 55N, 65N, 75N	52 – 78
165 W	55S, 50S, 45S, ..., 45N, 50N, 55N	79 – 101
160 W	75S, 65S, 55S, 50S, 45S, ..., 45N, 50N, 55N, 65N, 75N	102 – 128
155 W	55S, 50S, 45S, ..., 45N, 50N, 55N	129 – 151
150 W	75S, 65S, 55S, 50S, 45S, ..., 45N, 50N, 55N, 65N, 75N	152 – 178
145 W	55S, 50S, 45S, ..., 45N, 50N, 55N	179 – 201
Band 1		
140 W	85S, 75S, 65S, 55S, 50S, 45S, ..., 45N, 50N, 55N, 65N, 75N	1 – 28
135 W	55S, 50S, 45S, ..., 45N, 50N, 55N	29 – 51
130 W	75S, 65S, 55S, 50S, 45S, ..., 45N, 50N, 55N, 65N, 75N	52 – 78
125 W	55S, 50S, 45S, ..., 45N, 50N, 55N	79 – 101
120 W	75S, 65S, 55S, 50S, 45S, ..., 45N, 50N, 55N, 65N, 75N	102 – 128
115 W	55S, 50S, 45S, ..., 45N, 50N, 55N	129 – 151
110 W	75S, 65S, 55S, 50S, 45S, ..., 45N, 50N, 55N, 65N, 75N	152 – 178
105 W	55S, 50S, 45S, ..., 45N, 50N, 55N	179 – 201
Band 2		
100 W	75S, 65S, 55S, 50S, 45S, ..., 45N, 50N, 55N, 65N, 75N	1 – 27
95 W	55S, 50S, 45S, ..., 45N, 50N, 55N	28 – 50
90 W	75S, 65S, 55S, 50S, 45S, ..., 45N, 50N, 55N, 65N, 75N, 85N	51 – 78
85 W	55S, 50S, 45S, ..., 45N, 50N, 55N	79 – 101
80 W	75S, 65S, 55S, 50S, 45S, ..., 45N, 50N, 55N, 65N, 75N	102 – 128
75 W	55S, 50S, 45S, ..., 45N, 50N, 55N	129 – 151
70 W	75S, 65S, 55S, 50S, 45S, ..., 45N, 50N, 55N, 65N, 75N	152 – 178
65 W	55S, 50S, 45S, ..., 45N, 50N, 55N	179 – 201

IGP location		Transmission order in IGP band mask
Band 3		
60 W	75S, 65S, 55S, 50S, 45S, ..., 45N, 50N, 55N, 65N, 75N	1 – 27
55 W	55S, 50S, 45S, ..., 45N, 50N, 55N	28 – 50
50 W	85S, 75S, 65S, 55S, 50S, 45S, ..., 45N, 50N, 55N, 65N, 75N	51 – 78
45 W	55S, 50S, 45S, ..., 45N, 50N, 55N	79 – 101
40 W	75S, 65S, 55S, 50S, 45S, ..., 45N, 50N, 55N, 65N, 75N	102 – 128
35 W	55S, 50S, 45S, ..., 45N, 50N, 55N	129 – 151
30 W	75S, 65S, 55S, 50S, 45S, ..., 45N, 50N, 55N, 65N, 75N	152 – 178
25 W	55S, 50S, 45S, ..., 45N, 50N, 55N	179 – 201
Band 4		
20 W	75S, 65S, 55S, 50S, 45S, ..., 45N, 50N, 55N, 65N, 75N	1 – 27
15 W	55S, 50S, 45S, ..., 45N, 50N, 55N	28 – 50
10 W	75S, 65S, 55S, 50S, 45S, ..., 45N, 50N, 55N, 65N, 75N	51 – 77
5 W	55S, 50S, 45S, ..., 45N, 50N, 55N	78 – 100
0	75S, 65S, 55S, 50S, 45S, ..., 45N, 50N, 55N, 65N, 75N, 85N	101 – 128
5 E	55S, 50S, 45S, ..., 45N, 50N, 55N	129 – 151
10 E	75S, 65S, 55S, 50S, 45S, ..., 45N, 50N, 55N, 65N, 75N	152 – 178
15 E	55S, 50S, 45S, ..., 45N, 50N, 55N	179 – 201
Band 5		
20 E	75S, 65S, 55S, 50S, 45S, ..., 45N, 50N, 55N, 65N, 75N	1 – 27
25 E	55S, 50S, 45S, ..., 45N, 50N, 55N	28 – 50
30 E	75S, 65S, 55S, 50S, 45S, ..., 45N, 50N, 55N, 65N, 75N	51 – 77
35 E	55S, 50S, 45S, ..., 45N, 50N, 55N	78 – 100
40 E	85S, 75S, 65S, 55S, 50S, 45S, ..., 45N, 50N, 55N, 65N, 75N	101 – 128
45 E	55S, 50S, 45S, ..., 45N, 50N, 55N	129 – 151
50 E	75S, 65S, 55S, 50S, 45S, ..., 45N, 50N, 55N, 65N, 75N	152 – 178
55 E	55S, 50S, 45S, ..., 45N, 50N, 55N	179 – 201
Band 6		
60 E	75S, 65S, 55S, 50S, 45S, ..., 45N, 50N, 55N, 65N, 75N	1 – 27
65 E	55S, 50S, 45S, ..., 45N, 50N, 55N	28 – 50
70 E	75S, 65S, 55S, 50S, 45S, ..., 45N, 50N, 55N, 65N, 75N	51 – 77
75 E	55S, 50S, 45S, ..., 45N, 50N, 55N	78 – 100
80 E	75S, 65S, 55S, 50S, 45S, ..., 45N, 50N, 55N, 65N, 75N	101 – 127
85 E	55S, 50S, 45S, ..., 45N, 50N, 55N	128 – 150
90 E	75S, 65S, 55S, 50S, 45S, ..., 45N, 50N, 55N, 65N, 75N, 85N	151 – 178
95 E	55S, 50S, 45S, ..., 45N, 50N, 55N	179 – 201
Band 7		
100 E	75S, 65S, 55S, 50S, 45S, ..., 45N, 50N, 55N, 65N, 75N	1 – 27
105 E	55S, 50S, 45S, ..., 45N, 50N, 55N	28 – 50
110 E	75S, 65S, 55S, 50S, 45S, ..., 45N, 50N, 55N, 65N, 75N	51 – 77
115 E	55S, 50S, 45S, ..., 45N, 50N, 55N	78 – 100
120 E	75S, 65S, 55S, 50S, 45S, ..., 45N, 50N, 55N, 65N, 75N	101 – 127
125 E	55S, 50S, 45S, ..., 45N, 50N, 55N	128 – 150
130 E	85S, 75S, 65S, 55S, 50S, 45S, ..., 45N, 50N, 55N, 65N,	151 – 178

IGP location		Transmission order in IGP band mask
	75N	
135 E	55S, 50S, 45S, ..., 45N, 50N, 55N	179 – 201
Band 8		
140 E	75S, 65S, 55S, 50S, 45S, ..., 45N, 50N, 55N, 65N, 75N	1 – 27
145 E	55S, 50S, 45S, ..., 45N, 50N, 55N	28 – 50
150 E	75S, 65S, 55S, 50S, 45S, ..., 45N, 50N, 55N, 65N, 75N	51 – 77
155 E	55S, 50S, 45S, ..., 45N, 50N, 55N	78 – 100
160 E	75S, 65S, 55S, 50S, 45S, ..., 45N, 50N, 55N, 65N, 75N	101 – 127
165 E	55S, 50S, 45S, ..., 45N, 50N, 55N	128 – 150
170 E	75S, 65S, 55S, 50S, 45S, ..., 45N, 50N, 55N, 65N, 75N	151 – 177
175 E	55S, 50S, 45S, ..., 45N, 50N, 55N	178 – 200
Band 9		
60 N	180W, 175W, 170W, …, 165E, 170E, 175E	1 – 72
65 N	180W, 170W, 160W, …, 150E, 160E, 170E	73 – 108
70 N	180W, 170W, 160W, …, 150E, 160E, 170E	109 – 144
75 N	180W, 170W, 160W, …, 150E, 160E, 170E	145 – 180
85 N	180W, 150W, 120W, …, 90E, 120E, 150E	181 – 192
Band 10		
60 S	180W, 175W, 170W, …, 165E, 170E, 175E	1 – 72
65 S	180W, 170W, 160W, …, 150E, 160E, 170E	73 – 108
70 S	180W, 170W, 160W, …, 150E, 160E, 170E	109 – 144
75 S	180W, 170W, 160W, …, 150E, 160E, 170E	145 – 180
85 S	170W, 140W, 110W, …, 100E, 130E, 160E	181 – 192

Table 31. Validity interval

Data	Bits used	Range of values	Resolution
Validity interval (V)	5	30 s to 960 s	30 s

Table 32. Latency time

Data	Bits used	Range of values	Resolution
Latency time (L)	3	0 s to 120 s	30 s

Table 33. Evaluation of GIVEIi

$GIVEI_i$	$\sigma^2_{i,GIVE}$
0	0.0084 m^2
1	0.0333 m^2
2	0.0749 m^2
3	0.1331 m^2
4	0.2079 m^2
5	0.2994 m^2
6	0.4075 m^2
7	0.5322 m^2
8	0.6735 m^2
9	0.8315 m^2
10	1.1974 m^2

$GIVEI_i$	$\sigma^2_{i,GIVE}$
11	1.8709 m^2
12	3.3260 m^2
13	20.787 m^2
14	187.0826 m^2
15	"Not Monitored"

3.5.4.7 *Degradation parameters.* Degradation parameters, whenever used, shall be as follows:

Fast correction degradation factor indicator (ai_i): an indicator of the fast correction degradation factor (a_i) for the ith satellite as described in Table 34.

Note: *The ai_i is also used to define the time-out interval for fast corrections, as described in 3.5.8.1.2.*

System latency time (tlat): the time interval between the origin of the fast correction degradation and the user differential range estimate indicator (UDREI) reference time.

B_{rrc}*:* a parameter that bounds the noise and round-off errors when computing the range rate correction degradation as in 3.5.5.6.2.2.

C_{ltc_lsb}*:* the maximum round-off error due to the resolution of the orbit and clock information.

C_{ltc_v1}*:* the velocity error bound on the maximum range rate difference of missed messages due to clock and orbit rate differences.

I_{ltc_v1}*:* the update interval for long-term corrections if velocity code = 1 (3.5.4.4.1).

C_{ltc_v0}*:* a parameter that bounds the difference between two consecutive long-term corrections for satellites with a velocity code = 0.

I_{ltc_v0}*:* the minimum update interval for long-term messages if velocity code = 0 (3.5.4.4.1).

C_{GEO_lsb}*:* the maximum round-off error due to the resolution of the orbit and clock information.

C_{GEO_v}*:* the velocity error bound on the maximum range rate difference of missed messages due to clock and orbit rate differences.

I_{GEO}*:* the update interval for GEO ranging function messages.

Table 34. Fast correction degradation factor

Fast correction degradation factor indicator (aii)	Fast correction degradation factor (ai)
0	0.0 mm/s_2
1	0.05 mm/s_2
2	0.09 mm/s_2
3	0.12 mm/s_2
4	0.15 mm/s_2
5	0.20 mm/s_2
6	0.30 mm/s_2
7	0.45 mm/s_2
8	0.60 mm/s_2
9	0.90 mm/s_2
10	1.50 mm/s_2
11	2.10 mm/s_2
12	2.70 mm/s_2
13	3.30 mm/s_2
14	4.60 mm/s_2
15	5.80 mm/s_2

C_{er}: the bound on the residual error associated with using data beyond the precision approach/approach with vertical guidance time-out.

C_{iono_step}: the bound on the difference between successive ionospheric grid delay values.

I_{iono}: the minimum update interval for ionospheric correction messages.

$C_{iono\ ramp}$: the rate of change of the ionospheric corrections.

RSS_{UDRE}: the root-sum-square flag for fast and long-term correction residuals.

Coding: 0 = correction residuals are linearly summed
1 = correction residuals are root-sum-squared

RSS_{iono}: the root-sum-square flag for ionospheric residuals.

Coding: 0 = correction residuals are linearly summed
1 = correction residuals are root-sum-squared

$C_{covariance}$: the term which is used to compensate for quantization effects when using the Type 28 message.

Note 1: *The parameters ai and tlat are broadcast in Type 7 message. All other parameters are broadcast in Type 10 message.*

Note 2: *If message Type 28 is not broadcast, Ccovariance is not applicable.*

3.5.4.8 *Time parameters.* Time parameters, whenever used, shall be as follows:

UTC standard identifier: an indication of the UTC reference source as defined in Table 35.

GPS time-of-week count: the number of seconds that have passed since the transition from the previous GPS week (similar to the GPS parameter in 3.1.1.2.6.1 but with a 1-second resolution).

Table 35. UTC standard identifier

UTC standard identifier	UTC standard
0	UTC as operated by the Communications Research Laboratory, Tokyo, Japan
1	UTC as operated by the U.S. National Institute of Standards and Technology
2	UTC as operated by the U.S. Naval Observatory
3	UTC as operated by the International Bureau of Weights and Measures
4	Reserved for UTC as operated by a European laboratory
5	UTC as operated by the National Time Service Center, Chinese Academy of Sciences
6	Spare
7	UTC not provided

GPS week number (week count): see 3.1.1.2.6.2.

GLONASS indicator: a flag indicating if GLONASS time parameters are provided.

Coding: 0 = GLONASS time parameters are not provided
1 = GLONASS time parameters are provided

GLONASS time offset ($\delta a_{i,GLONASS}$): A parameter that represents the stable part of the offset between the GLONASS time and the SBAS network time.

Note: *If SBAS does not support GLONASS, $\delta a_{i,GLONASS}$ is not applicable.*

UTC parameters: A_{1SNT}, A_{0SNT}, t_{0t}, WN_t, Δt_{LS}, WN_{LSF}, DN and Δt_{LSF} are as described in 3.1.1.3.3.6, with the exception that the SBAS parameters relate SNT to UTC time, rather than GPS time.

Note: *All parameters are broadcast in Type 12 message.*

3.5.4.9 *Service region parameters.* Service region parameters shall be as follows:

Issue of data, service (IODS): an indication of a change of the service provided in the region.

Number of service messages: the number of different Type 27 SBAS service messages being broadcast. (Value is coded with an offset of 1.)

Service message number: a sequential number identifying the message within the currently broadcast set of Type 27 messages (from 1 to number of service messages, coded with an offset of 1).

Number of regions: the number of service regions for which coordinates are broadcast in the message.

Priority code: an indication of a message precedence if two messages define overlapping regions. The message with a higher value of priority code takes precedence. If priority codes are equal, the message with the lower δUDRE takes precedence.

δ*UDRE indicator-inside:* an indication of regional UDRE degradation factor (δUDRE) applicable at locations inside any region defined in the message, in accordance with Table 36.

δ*UDRE indicator-outside:* an indication of regional UDRE degradation factor (δUDRE) applicable at locations outside all regions defined in all current Type 27 messages, in accordance with Table 36.

Coordinate latitude: the latitude of one corner of a region.

Coordinate longitude: the longitude of one corner of a region.

Region shape: an indication of whether a region is a triangle or quadrangle.

Coding: 0 = triangle
1 = quadrangle

Note 1: *Coordinate 3 has Coordinate 1 latitude and Coordinate 2 longitude. If region is a quadrangle, coordinate 4 has Coordinate 2 latitude and Coordinate 1 longitude. Region boundary is formed by joining coordinates in the sequence 1-2-3-1 (triangle) or 1-3-2-4-1 (quadrangle). Boundary segments have either constant latitude, constant longitude, or constant slope in degrees of latitude per degree of longitude. The change in latitude or longitude along any boundary segment between two coordinates is less than ±180 degrees.*

Note 2: *All parameters are broadcast in Type 27 message.*

Table 36. δUDRE indicator evaluation

δUDRE indicator	δUDRE
0	1
1	1.1
2	1.25
3	1.5
4	2
5	3
6	4
7	5
8	6
9	8
10	10
11	20
12	30
13	40
14	50
15	100

3.5.4.10 *Clock-ephemeris covariance matrix parameters*. Clock-ephemeris covariance matrix parameters shall be as follows:

PRN mask number: see 3.5.4.1.

Scale exponent: A term to compute the scale factor used to code the Cholesky factorization elements.

Cholesky factorization elements ($E_{i,j}$): Elements of an upper triangle matrix which compresses the information in the clock and ephemeris covariance matrix. These elements are used to compute the user differential range estimate (UDRE) degradation factor (δUDRE) as a function of user position.

3.5.5 DEFINITIONS OF PROTOCOLS FOR DATA APPLICATION

Note: *This section provides definitions of parameters used by the non-aircraft or aircraft elements that are not transmitted. These parameters, necessary to ensure interoperability of SBAS, are used to determine the navigation solution and its integrity (protection levels).*

3.5.5.1 *GEO POSITION AND CLOCK*

3.5.5.1.1 *GEO position estimate*. The estimated position of a GEO at any time t_k is:

$$\begin{bmatrix}\hat{X}_G\\ \hat{Y}_G\\ \hat{Z}_G\end{bmatrix} = \begin{bmatrix}X_G\\ Y_G\\ Z_G\end{bmatrix} + \begin{bmatrix}\dot{X}_G\\ \dot{Y}_G\\ \dot{Z}_G\end{bmatrix}(t-t_{0,GEO}) + \frac{1}{2}\begin{bmatrix}\ddot{X}_G\\ \ddot{Y}_G\\ \ddot{Z}_G\end{bmatrix}(t-t_{0,GEO})^2$$

3.5.5.1.2 *GEO clock correction*. The clock correction for a SBAS GEO satellite *i* is applied in accordance with the following equation:

$$\mathbf{t = t_G - \Delta t_G}$$

where

t = SBAS network time;

t_G = GEO code phase time at transmission of message; and

Δt_G = GEO code phase offset.

3.5.5.1.2.1 GEO code phase offset (Δt_G) at any time *t* is:

$$\mathbf{\Delta t_G = a_{Gf0} + a_{Gf1}\,(t - t_{0,GEO})}$$

where $(t - t_{0,GEO})$ is corrected for end-of-day crossover.

3.5.5.2 LONG-TERM CORRECTIONS

3.5.5.2.1 *GPS clock correction*. The clock correction for a GPS satellite *i* is applied in accordance with the following equation:

$$\mathbf{t = t_{SV,i} - [(\Delta t_{SV,i})_{L1} + \delta\Delta t_{SV,i}]}$$

where

t = SBAS network time;

$t_{SV,i}$ = the GPS satellite time at transmission of message;

$(\Delta t_{SV,i})L1$ = the satellite PRN code phase offset as defined in 3.1.2.2; and

$\delta\Delta t_{SV,i}$ = the code phase offset correction.

3.5.5.2.1.1 The code phase offset correction ($\delta\Delta t_{SV,i)}$ for a GPS or SBAS satellite *i* at any time of day t_k is:

$$\delta\Delta t_{SV,i} = \delta a_{i,f0} + \delta a_{i,f1}(t_k - t_{i,LT})$$

3.5.5.2.2 *GLONASS clock correction*. The clock correction for a GLONASS satellite *i* is applied in accordance with the following equation:

$$t = t_{SV,i} + \tau_n(t_b) - \gamma_n(t_b)(t_{SV,i} - t_b) - \delta\Delta t_{SV,i}$$

where

t = SBAS network

$t_{SV,i\,=}$ the GLONASS satellite time at transmission of message

t_b, $\tau_n(t_b)$, $\gamma_n(t_b)$ = the GLONASS time parameters as defined in 3.2.2.2

$\delta\Delta t_{SV,i}$ = the code phase offset correction

The code phase offset correction $\delta\Delta t_{SV,i}$ for a GLONASS satellite *i* is:

$$\delta\Delta t_{SV,i} = \delta a_{i,f0} + \delta a_{i,f1}(t - t_{i,LT}) + \delta a_{i,GLONASS}$$

where $(t - t_{i,LT})$ is corrected for end-of-day crossover. If the velocity code = 0, then $\delta_{ai,f1} = 0$.

3.5.5.2.3 *Satellite position correction*. The SBAS-corrected vector for a core satellite constellation(s) or SBAS satellite *i* at time *t* is:

$$\begin{bmatrix} x_i \\ y_i \\ z_i \end{bmatrix}_{corrected} = \begin{bmatrix} x_i \\ y_i \\ z_i \end{bmatrix} + \begin{bmatrix} \delta x_i \\ \delta y_i \\ \delta z_i \end{bmatrix} + \begin{bmatrix} \delta\dot{x}_i \\ \delta\dot{y}_i \\ \delta\dot{z}_i \end{bmatrix} (t - t_{i,LT})$$

where

$(t - t_{i,LT})$ is corrected for end-of-day crossover; and

$[x_i\ y_i\ z_i]^T$ = the core satellite constellation(s) or SBAS satellite position vector as defined in 3.1.2.3, 3.2.2.3 and 3.5.5.1.1.

If the velocity code = 0, then $[\delta\dot{x}_i\ \delta\dot{y}_i\ \delta\dot{z}_i]^T = [0\ 0\ 0]^T$.

3.5.5.3 *Pseudo-range corrections*. The corrected pseudo-range at time *t* for satellite *i* is:

$$\mathbf{PR_{i,corrected} = PR_i + FC_i + RRC_i\,(t - t_{i,0f}) + IC_i + TC_i}$$

where

PR_i = the measured pseudo-range after application of the satellite clock correction;

FC_i = the fast correction;

RRC_i = the range rate correction;

IC_i = the ionospheric correction;

TC_i = the tropospheric correction (negative value representing the troposphere delay); and

$t_{i,0f}$ = the time of applicability of the most recent fast corrections, which is the start of the epoch of the SNT second that is coincident with the transmission at the SBAS satellite of the first symbol of the message block.

3.5.5.4 *Range rate corrections (RRC)*. The range rate correction for satellite *i* is:

$$\mathbf{RRC_i = \text{ے}}$$

$$RRC_i = \begin{cases} \dfrac{FC_{i,current} - FC_{i,previous}}{t_{i,0f} - t_{i,0f_previous}}, if\ a_i \neq 0 \\ 0, if\ a_i = 0 \end{cases}$$

where

$FC_{i,current}$ = the most recent fast correction;

$FC_{i,previous}$ = a previous fast correction;

$t_{i,0f}$ = the time of applicability of $FC_{i,current}$;

$t_{i,0f_previous}$ = the time of applicability of $FC_{i,previous}$; and

a_i = fast correction degradation factor (see Table 34).

3.5.5.5 *BROADCAST IONOSPHERIC CORRECTIONS*

3.5.5.5.1 *Location of ionospheric pierce point (IPP)*. The location of an IPP is defined to be the intersection of the line segment from the receiver to the satellite and an ellipsoid with constant height of 350 km above the WGS-84 ellipsoid. This location is defined in WGS-84 latitude (φpp) and longitude (λpp).

3.5.5.5.2 *Ionospheric corrections*. The ionospheric correction for satellite *i* is:

$$\mathbf{ICi = – Fpp\ \tau vpp}$$

where

Fpp = obliquity factor = $\left[1 - \left(\frac{R_e \cos\theta_i}{R_e + h_1}\right)^2\right]^{-\frac{1}{2}}$

vpp = interpolated vertical ionospheric delay estimate (3.5.5.5.3);

Re = 6 378.1363 km;

θi = elevation angle of satellite *i*; and

hI = 350 km.

Note: *For GLONASS satellites, the ionospheric correction (IC_i) is to be multiplied by the square of the ratio of the GLONASS to the GPS frequencies ($f_{GLONASS}/f_{GPS})_2$.*

3.5.5.5.3 *Interpolated vertical ionospheric delay estimate.* When four points are used for interpolation, the interpolated vertical ionospheric delay estimate at latitude φpp and longitude λ_{pp} is:

$$\tau_{vpp} = \sum_{k=1}^{4} W_k \tau_{vk}$$

where

τ_{vk}: the broadcast grid point vertical delay values at the kth corner of the IGP grid, as shown in Figure 13.

$W_1 = x_{pp}\, y_{pp}$;

$W_2 = (1 - x_{pp})\, y_{pp}$;

$W_3 = (1 - x_{pp})\,(1 - y_{pp})$; and

$W_4 = x_{pp}\,(1 - y_{pp})$.

3.5.5.5.3.1 For IPPs between N85° and S85°:

$$x_{pp} = \frac{\lambda_{pp} - \lambda_1}{\lambda_2 - \lambda_1}$$

$$y_{pp} = \frac{\phi_{pp} - \phi_1}{\phi_2 - \phi_1}$$

where

λ_1 = longitude of IGPs west of IPP;

λ_2 = longitude of IGPs east of IPP;

φ_1 = latitude of IGPs south of IPP; and

φ_2 = latitude of IGPs north of IPP.

Note: *If λ_1 and λ_2 cross 180 degrees of longitude, the calculation of x_{pp} must account for the discontinuity in longitude values.*

3.5.5.5.3.2 For IPPs north of N85° or south of S85°:

$$y_{pp} = \frac{|\phi_{pp}| - 85°}{10°}$$

$$x_{pp} = \frac{\lambda_{pp} - \lambda_3}{90°} \times (1 - 2\,y_{pp}) + y_{pp}$$

where

λ_1 = longitude of the second IGP to the east of the IPP;

λ_2 = longitude of the second IGP to the west of the IPP;

λ_3 = longitude of the closest IGP to the west of the IPP; and

λ_4 = longitude of the closest IGP to the east of the IPP.

When three points are used for interpolation, the interpolated vertical ionospheric delay estimated is:

3.5.5.5.3.3 For points between S75° and N75°:

$$\tau_{vpp} = \sum_{k=1}^{3} W_k\,\tau_{vk}$$

where

$W_1 = y_{pp}$;

$W_2 = 1 - x_{pp} - y_{pp}$; and

$W_3 = x_{pp}$.

3.5.5.5.3.4 x_{pp} and ypp are calculated as for four-point interpolation, except that λ_1 and φ_1 are always the longitude and latitude of IGP2, and λ_2 and φ_2 are the other longitude and latitude. IGP2 is always the vertex opposite the hypotenuse of the triangle defined by the three points, IGP1 has the same longitude as IGP2, and IGP3 has the same latitude as IGP2 (an example is shown in Figure 14).

3.5.5.5.3.5 For points north of N75° and south of S75°, three-point interpolation is not supported.

3.5.5.5.4 *Selection of ionospheric grid points (IGPs).* The protocol for the selection of IGPs is:

a) For an IPP between N60° and S60°:

1. if four IGPs that define a 5-degree-by-5-degree cell around the IPP are set to “1” in the IGP mask, they are selected; else,

2. if any three IGPs that define a 5-degree-by-5-degree triangle that circumscribes the IPP are set to “1” in the IGP mask, they are selected; else,

3. if any four IGPs that define a 10-degree-by-10-degree cell around the IPP are set to “1” in the IGP mask, they are selected; else,

4. if any three IGPs that define a 10-degree-by-10-degree triangle that circumscribes the IPP are set to “1” in the IGP mask, they are selected; else,

5. an ionospheric correction is not available.

b) For an IPP between N60° and N75° or between S60° and S75°:

1. if four IGPs that define a 5-degree-latitude-by-10-degree longitude cell around the IPP are set to “1” in the IGP mask, they are selected; else,

2. if any three IGPs that define a 5-degree-latitude-by-10-degree longitude triangle that circumscribes the IPP are set to “1” in the IGP mask, they are selected; else,

3. if any four IGPs that define a 10-degree-by-10-degree cell around the IPP are set to “1” in the IGP mask, they are selected; else,

4. if any three IGPs that define a 10-degree-by-10-degree triangle that circumscribes the IPP are set to “1” in the IGP mask, they are selected; else,

5. an ionospheric correction is not available.

c) For an IPP between N75° and N85° or between S75° and S85°:

1. if the two nearest IGPs at 75° and the two nearest IGPs at 85° (separated by 30° longitude if Band 9 or 10 is used, separated by 90° otherwise) are set to “1” in the IGP mask, a 10-degree-by-10-degree cell is created by linearly interpolating between the IGPs at 85° to obtain virtual IGPs at longitudes equal to the longitudes of the IGPs at 75°; else,

2. an ionospheric correction is not available.

d) For an IPP north of N85°:

1. if the four IGPs at N85° latitude and longitudes of W180°, W90°, 0° and E90° are set to “1” in the IGP mask, they are selected; else,

2. an ionospheric correction is not available.

e) For an IPP south of S85°:

1. if the four IGPs at S85° latitude and longitudes of W140°, W50°, E40° and E130° are set to “1” in the IGP mask, they are selected; else,

2. an ionospheric correction is not available.

Note: *This selection is based only on the information provided in the mask, without regard to whether the selected IGPs are monitored, “Not Monitored”, or “Do Not Use”. If any of the selected IGPs*

is identified as "Do Not Use", an ionospheric correction is not available. If four IGPs are selected, and one of the four is identified as "Not Monitored", then three-point interpolation is used if the IPP is within the triangular region covered by the three corrections that are provided.

3.5.5.6 *Protection levels*. The horizontal protection level (HPL) and the vertical protection level (VPL) are:

$$HPL_{SBAS} = \begin{cases} K_{H,NPA} \times d_{major} & \text{for en-route through non-precision approach (NPA) modes} \\ K_{H,PA} \times d_{major} & \text{for precision approach (PA) and approach with vertical guidance (APV) modes} \end{cases}$$

$$VPL_{SBAS} = K_{V,PA} \times d_V$$

where

$d_V^2 = \sum_{i=1}^{N} s_{v,i}^2 \sigma_i^2$ = variance of model distribution that overbounds the true error distribution in the vertical axis;

$$d_{major} = \sqrt{\frac{d_x^2 + d_y^2}{2} + \sqrt{\left(\frac{d_x^2 - d_y^2}{2}\right)^2 + d_{xy}^2}}$$

where

$d_x^2 = \sum_{i=1}^{N} s_{x,i}^2 \sigma_i^2$ = variance of model distribution that overbounds the true error distribution in the x axis;

$d_y^2 = \sum_{i=1}^{N} s_{y,i}^2 \sigma_i^2$ = variance of model distribution that overbounds the true error distribution in the y axis;

$d_{xy} = \sum_{i=1}^{N} s_{x,i} s_{y,i} \sigma_i^2$ = covariance of model distribution in the x and y axis;

where

$sx_{,i}$ = the partial derivative of position error in the x-direction with respect to pseudo-range error on the ith satellite;

$sy_{,i}$ = the partial derivative of position error in the y-direction with respect to pseudo-range error on the ith satellite;

$sV_{,i}$ = the partial derivative of position error in the vertical direction with respect to pseudo-range error on the ith satellite; and

$$\sigma_i^2 = \sigma_{i,flt}^2 + \sigma_{i,UIRE}^2 + \sigma_{i,air}^2 + \sigma_{i,tropo}^2$$

The variances ($\sigma_{i,flt}^2$ and $\sigma_{i,UIRE}^2$) are defined in 3.5.5.6.2 and 3.5.5.6.3.1. The parameters ($\sigma_{i,air}^2$ and $\sigma_{i,tropo}^2$) are determined by the aircraft element (3.5.8.4.2 and 3.5.8.4.3).

The x and y axes are defined to be in the local horizontal plane, and the v axis represents local vertical.

For a general least-squares position solution, the projection matrix S is:

$$S \equiv \begin{bmatrix} S_{x,1} & S_{x,2} & \cdots & S_{x,N} \\ S_{y,1} & S_{y,2} & \cdots & S_{y,N} \\ S_{v,1} & S_{v,2} & \cdots & S_{v,N} \\ S_{t,1} & S_{t,2} & \cdots & S_{t,N} \end{bmatrix} = (G^T \times W \times G)^{-1} \times G^T \times W$$

where

G_i = [–cos El_i cos Az_i –cos El_i sin Az_i –sin El_i 1] = i^{th} row of G;

$$W^{-1} = \begin{bmatrix} w_1 & 0 & \cdots & 0 \\ 0 & w_2 & \cdots & 0 \\ \vdots & \vdots & \ddots & \vdots \\ 0 & & \cdots & w_i \end{bmatrix}$$

El_i = the elevation angle of the ith ranging source (in degrees);

Az_i = the azimuth of the ith ranging source taken counter-clockwise from the x axis in degrees; and

w_i = the inverse weight associated with satellite *i* = $\sigma^2 i$.

Note 1: *To improve readability, the subscript i was omitted from the protection matrix's equation.*

Note 2: *For an unweighted least-squares solution, the weighting matrix is an identity matrix ($w_i = 1$).*

3.5.5.6.1 *Definition of K values.* The K values are:

$K_{H,NPA}$ = 6.18;

$K_{H,PA}$ = 6.0; and

$K_{V,PA}$ = 5.33.

3.5.5.6.2 *Definition of fast and long-term correction error model*. If fast corrections and long-term correction/GEO ranging parameters are applied, and degradation parameters are applied:

$$\sigma^2_{i,flt} = \begin{cases} \left[(\sigma_{i,UDRE})(\delta_{UDRE}) + \varepsilon_{fc} + \varepsilon_{rrc} + \varepsilon_{ltc} + \varepsilon_{er}\right]^2, & \text{if } RSS_{UDRE} = 0 \text{ (Message Type 10)} \\ \left[(\sigma_{i,UDRE})(\delta_{UDRE})\right]^2 + \varepsilon^2_{fc} + \varepsilon^2_{rrc} + \varepsilon^2_{ltc} + \varepsilon^2_{er}, & \text{if } RSS_{UDRE} = 1 \text{ (Message Type10)} \end{cases}$$

where

if using message Type 27, δ_{UDRE} is a region-specific term as defined in section 3.5.4.9,

if using message Type 28, δ_{UDRE} is a satellite-specific term as defined in section 3.5.5.6.2.5,

if using neither message, δ_{UDRE} = 1.

If fast corrections and long-term corrections/GEO ranging parameters are applied, but degradation parameters are not applied:

$\sigma^2_{i,flt} = [(\sigma_{i,UDRE})\ (\delta_{UDRE}) + 8m]^2$

3.5.5.6.2.1 *Fast correction degradation.* The degradation parameter for fast correction data is:

$$\varepsilon_{fc} = \frac{a(t-t_u+t_{lat})^2}{2}$$

where

t = the current time;

t_u = (UDREI$_i$ reference time): if IODF$_j$ ≠3, the start time of the SNT 1-second epoch that is coincident with the start of the transmission of the message block that contains the most recent UDREI$_i$ data (Type 2 to 6, or Type 24 messages) that matches the IODF$_j$ of the fast correction being used. If IODF$_j$ = 3, the start time of the epoch of the SNT 1-second epoch that is coincident with the start of transmission of the message that contains the fast correction for the ith satellite; and

t_{lat} = (as defined in 3.5.4.7).

Note: *For UDREs broadcast in Type 2 to 5, and Type 24 messages, t_u equals the time of applicability of the fast corrections since they are in the same message. For UDREs broadcast in Type 6 message and if the IODF = 3, t_u also equals the time of applicability of the fast corrections (t_{0f}). For UDREs broadcast in Type 6 message and IODF ≠ 3, t_u is defined to be the time of transmission of the first bit of Type 6 message at the GEO.*

3.5.5.6.2.2 *Range rate correction degradation*

3.5.5.6.2.2.1 If the RRC = 0, then εrrc = 0.

3.5.5.6.2.2.2 If the RRC ≠ 0 and IODF ≠ 3, the degradation parameter for fast correction data is:

$$\varepsilon_{rrc} = \begin{cases} 0, & \text{if } (IODF_{current} - IODF_{previous}) MOD 3 = 1 \\ \left(\frac{aI_{fc}}{4} + \frac{B_{rrc}}{\Delta t}\right)(t-t_{0f}), & \text{if } (IODF_{current} - IODF_{previous}) MOD 3 \neq 1 \end{cases}$$

3.5.5.6.2.2.3 If RRC ≠ 0 and IODF = 3, the degradation parameter for range rate data is:

$$\varepsilon_{rrc} = \begin{cases} 0, & \text{if } \left|\Delta t - \frac{I_{fc}}{2}\right| = 0 \\ \left(\frac{a\left|\Delta t - \frac{I_{fc}}{2}\right|}{2} + \frac{B_{rrc}}{\Delta t}\right)(t-t_{0f}), & \text{if } \left|\Delta t - \frac{I_{fc}}{2}\right| \neq 0 \end{cases}$$

where

t = the current time;

$IODF_{current}$ = IODF associated with most recent fast correction;

$IODF_{previous}$ = IODF associated with previous fast correction;

$\Delta t = t_{i,0f} - t_{i,0f_previous}$; and

I_{fc} = the user time-out interval for fast corrections.

3.5.5.6.2.3 *Long-term correction degradation*

3.5.5.6.2.3.1 *Core satellite constellation(s)*

3.5.5.6.2.3.1.1 For velocity code = 1, the degradation parameter for long-term corrections of satellite *i* is:

$$\varepsilon_{ltc} = \begin{cases} 0, & \text{if } t_{i,LT} < t < t_{i,LT} + I_{ltc_v1} \\ C_{ltc_lsb} + C_{ltc_v1} \max\left(0, t_{i,LT} - t, t - t_{i,LT} - I_{ltc_v1}\right), & \text{otherwise} \end{cases}$$

3.5.5.6.2.3.1.2 For velocity code = 0, the degradation parameter for long-term corrections is:

$$\varepsilon_{ltc} = C_{ltc_v0} \left[\frac{t - t_{ltc}}{I_{lt\text{-}v0}}\right]$$

where

t = the current time;

t_{ltc} = the time of transmission of the first bit of the long-term correction message at the GEO; and

[*x*] = the greatest integer less than *x*.

3.5.5.6.2.3.2 *GEO satellites.* The degradation parameter for long-term corrections is:

$$\varepsilon_{ltc} = \begin{cases} 0, & \text{if } t_{0,GEO} < t < t_{0,GEO} + I_{GEO} \\ C_{geo_lsb} + C_{geo_v} \max\left(0, t_{0,GEO} - t, t - t_{0,GEO} - I_{geo}\right), & \text{otherwise} \end{cases}$$

where t = the current time.

Note: *When long-term corrections are applied to a GEO satellite, the long-term correction degradation is applied and the GEO navigation message degradation is not applied.*

3.5.5.6.2.4 *Degradation for en-route through non-precision approach*

$\varepsilon_{er} = \begin{cases} 0, \\ C_{er}, \end{cases}$ if neither fast nor long-term corrections have timed out for precision approach/approach with vertical guidance

if fast or long-term corrections have timed out for precision approach/ approach with vertical guidance

3.5.5.6.2.5 *UDRE degradation factor calculated with message Type 28 data*. The δUDRE is:

$$\delta_{UDRE} = \sqrt{I^T \cdot C \cdot I} + \varepsilon_c$$

where

$$I = \begin{bmatrix} i_x \\ i_y \\ i_z \\ 1 \end{bmatrix},$$

$\begin{bmatrix} i_x \\ i_y \\ i_z \end{bmatrix}$ = the unit vector from the user to the satellite in the WGS-84 ECEF coordinate frame

$C = R^T \cdot R$

$\varepsilon_C = C_{covariance} SF$

$SF = 2^{scale\ exponent - 5}$

$R = E \cdot SF$

$$E = \begin{bmatrix} E_{1,1} & E_{1,2} & E_{1,3} & E_{1,4} \\ 0 & E_{2,2} & E_{2,3} & E_{2,4} \\ 0 & 0 & E_{3,3} & E_{3,4} \\ 0 & 0 & 0 & E_{4,4} \end{bmatrix}$$

3.5.5.6.3 *Definition of ionospheric correction error model*

3.5.5.6.3.1 *Broadcast ionospheric corrections.* If SBAS-based ionospheric corrections are applied, σ_{2UIRE} is:

$$\sigma^2_{UIRE} = F^2_{pp} \times \sigma^2_{UIVE}$$

where

F_{pp} = (as defined in 3.5.5.5.2);

$$\sigma^2_{UIVE} = \sum_{n=1}^{4} W_n \cdot \sigma^2_{n,ionogrid} \text{ or } \sigma^2_{UIVE} = \sum_{n=1}^{3} W_n \cdot \sigma^2_{n,ionogrid}$$

using the same ionospheric pierce point weights (W_n) and grid points selected for the ionospheric correction (3.5.5.5).

If degradation parameters are used, for each grid point:

$$\varepsilon_{iono} = C_{iono_step}\left[\frac{t - t_{iono}}{I_{iono}}\right] + C_{iono_ramp}(t - t_{iono});$$

t = the current time;

t_{iono} = the time of transmission of the first bit of the ionospheric correction message at the GEO; and

$[x]$ = the greatest integer less than x.

where

$$\varepsilon_{iono} = C_{iono_step}\left[\frac{t - t_{iono}}{I_{iono}}\right] + C_{iono_ramp}(t - t_{iono});$$

t = the current time;

t_{iono} = the time of transmission of the first bit of the ionospheric correction message at the GEO; and

[*x*] = the greatest integer less than *x*.

If degradation parameters are not used, for each grid point:

$$\sigma_{n,ionogrid} = \sigma_{n,GIVE}$$

Note: *For GLONASS satellites, both σ_{GIVE} and ε_{iono} parameters are to be multiplied by the square of the ratio of the GLONASS to the GPS frequencies $(f_{GLONASS}/f_{GPS})^2$.*

3.5.5.6.3.2 *Ionospheric corrections.* If SBAS-based ionospheric corrections are not applied, σ^2_{UIRE} is:

$$\sigma^2_{UIRE} = MAX\left\{\left(\frac{T_{iono}}{5}\right)^2, \left(F_{pp} \cdot \tau_{vert}\right)^2\right\}$$

where

T_{iono} = the ionospheric delay estimated by the chosen model (GPS correction or other model);

F_{pp} = (as defined in 3.5.5.5.2);

$$\tau_{vert} = \begin{cases} 9\text{ m}, & 0 \le |\phi_{pp}| \le 20 \\ 4.5\text{ m}, & 20 < |\phi_{pp}| \le 55; \text{ and} \\ 6\text{ m}, & 55 < |\phi_{pp}| \end{cases}$$

φ_{pp} = latitude of the ionospheric pierce point.

3.5.6 MESSAGE TABLES

Each SBAS message shall be coded in accordance with the corresponding message format defined in Tables 37 through 53. All signed parameters in these tables shall be represented in two's complement, with the sign bit occupying the MSB.

Note: *The range for the signed parameters is smaller than indicated, as the maximum positive value is constrained to be one value less (the indicated value minus the resolution).*

Table 37. Type 0 "Do Not Use" message

Data content	Bits used	Range of values	Resolution
Spare	212	—	—

Table 38. Type 1 PRN mask message

Data content	Bits used	Range of values	Resolution
For each of 210 PRN code numbers Mask value	1	0 or 1	1
IODP	2	0 to 3	1

Note: *All parameters are defined in 3.5.4.1.*

Table 39. Types 2 to 5 fast correction message

Data content	Bits used	Range of values	Resolution
$IODF_j$	2	0 to 3	1
IODP	2	0 to 3	1
For 13 slots Fast correction (FC_i)	12	±256.000 m	0.125 m
For 13 slots $UDREI_i$	4	(see Table 29)	(see Table 29)

Notes:
1. The parameters IODFj and FCi are defined in 3.5.4.4.2.
2. The parameter IODP is defined in 3.5.4.1.
3. The parameter UDREIi is defined in 3.5.4.5.

Table 40. Type 6 integrity message

Data content	Bits used	Range of values	Resolution
IODF2	2	0 to 3	1
IODF3	2	0 to 3	1
IODF4	2	0 to 3	1
IODF5	2	0 to 3	1
For 51 satellites (ordered by PRN mask number)			
UDREIi	4	(see Table 29)	(see Table 29)

Notes:
1. The parameters IODFj are defined in 3.5.4.4.2.
2. The parameter UDREIi is defined in 3.5.4.5.

Table 41. Type 7 fast correction degradation factor message

Data content	Bits used	Range of values	Resolution
System latency (t_{lat})	IODP	4	2
0 to 15 s	0 to 3	1 s	1
Spare	2	—	—
For 51 satellites (ordered by PRN mask number)			
Degradation factor indicator (ai_i)	4	(see Table 34)	(see Table 34)

Notes:
1. The parameters t_{lat} and ai_i are defined in 3.5.4.7.
2. The parameter IODP is defined in 3.5.4.1.

Table 42. Type 9 ranging function message

Data content	Bits used	Range of values	Resolution
Reserved	8	—	—
$t_{0,GEO}$	13	0 to 86 384 s	16 s
URA	4	(see Table 26)	(see Table 26)
X_G	30	±42 949 673 m	0.08 m
Y_G	30	±42 949 673 m	0.08 m
Z_G	25	±6 710 886.4 m	0.4 m
$\dot{X}_G$	17	±40.96 m/s	0.000625 m/s
$\dot{Y}_G$	17	±40.96 m/s	0.000625 m/s
$\dot{Z}_G$	18	±524.288 m/s	0.004 m/s
$\ddot{X}_G$	10	±0.0064 m/s^2	0.0000125 m/s^2
$\ddot{Y}_G$	10	±0.0064 m/s^2	0.0000125 m/s^2
$\ddot{Z}_G$	10	±0.032 m/s^2	0.0000625 m/s^2
a_{Gf1}	12	±0.9537 × 10^{-6} s	2^{-31} s
a_{Gf0}	8	±1.1642 × 10^{-10} s/s	2^{-40} s/s

Note: *All parameters are defined in 3.5.4.2.*

Table 43. Type 10 degradation parameter message

Data content	Bits used	Range of values	Resolution
B_{rrc}	10	0 to 2.046 m	0.002 m
$C_{ltc\ lsb}$	10	0 to 2.046 m	0.002 m
$C_{ltc\ v1}$	10	0 to 0.05115 m/s	0.00005 m/s
$I_{ltc\ v1}$	9	0 to 511 s	1 s
$C_{ltc\ v0}$	10	0 to 2.046 m	0.002 m
$I_{ltc\ v0}$	9	0 to 511 s	1 s
$C_{geo\ lsb}$	10	0 to 0.5115 m	0.0005 m
$C_{geo\ v}$	10	0 to 0.05115 m/s	0.00005 m/s
I_{geo}	9	0 to 511 s	1 s
C_{er}	6	0 to 31.5 m	0.5 m
$C_{iono\ step}$	10	0 to 1.023 m	0.001 m
I_{iono}	9	0 to 511 s	1 s
$C_{iono\ ramp}$	10	0 to 0.005115 m/s	0.000005 m/s
RSS_{UDRE}	1	0 or 1	1
RSS_{iono}	1	0 or 1	1
$C_{covariance}$	7	0 to 12.7	0.1
Spare	81	—	—

Note: *All parameters are defined in 3.5.4.7.*

Table 44. Type 12 SBAS network time/UTC message

Data content	Bits used	Range of values	Resolution
A_{1SNT}	24	$\pm 7.45 \times 10^{-9}$ s/s	2^{-50} s/s
A_{0SNT}	32	±1 s	2^{-30} s
t_{0t}	8	0 to 602 112 s	4 096 s
WN_t	8	0 to 255 weeks	1 week
Δ_{tLS}	8	±128 s	1 s
WN_{LSF}	8	0 to 255 weeks	1 week
DN			
Δt_{LSF}	8	1 to 7 days	1 day
UTC standard identifier	8	±128 s	1 s
GPS time-of-week (TOW)	3	(see Table 35)	(see Table 35)
GPS week number (WN)	20	0 to 604 799 s	1 s
GLONASS indicator	10	0 to 1 023 weeks	1 week
$\delta_{ai,\ GLONASS}$ (*Note 2*)	1	0 or 1	1
Spare	24	$\pm 2.0 \times 10^{-8}$ s	2.0×10^{-31} s
	50	—	—

Notes:

1. All parameters are defined in 3.5.4.8.

2. Applies only if SBAS sends GLONASS timing information in message Type 12 (see 3.5.7.4.4, Timing data).

Table 45. Type 17 GEO almanac message

Data content	Bits used	Range of values	Resolution
For each of 3 satellites			
Reserved	2	0	—
PRN code number	8	0 to 210	1
Health and status	8	—	—
$X_{G,A}$	15	±42 598 400 m	2 600 m
$Y_{G,A}$	15	±42 598 400 m	2 600 m
$Z_{G,A}$	9	±6 656 000 m	26 000 m
$\dot{X}_{G,A}$	3	±40 m/s	10 m/s
$\dot{Y}_{G,A}$	3	±40 m/s	10 m/s
$\dot{Z}_{G,A}$	4	±480 m/s	60 m/s
$t_{almanac}$ (applies to all three satellites)	11	0 to 86 336 s	64 s

Note: *All parameters are defined in 3.5.4.3.*

Table 46. Type 18 IGP mask message

Data content	Bits used	Range of values	Resolution
Number of IGP bands	4	0 to 11	1
IGP band identifier	4	0 to 10	1
Issue of data — ionosphere ($IODI_k$)	2	0 to 3	1
For 201 IGPs			
IGP mask value	1	0 or 1	1
Spare	1	—	—

Note: *All parameters are defined in 3.5.4.6.*

Table 47. Type 24 mixed fast/long-term satellite error correction message

Data content	Bits used	Range of values	Resolution
For 6 slots			
Fast correction (FCi)	12	±256.000 m	0.125 m
For 6 slots			
$UDREI_i$	4	(see Table 31)	(see Table 31)
IODP	2	0 to 3	1
Fast correction type identifier	2	0 to 3	1
$IODF_i$	2	0 to 3	1
Spare	4	—	—
Type 25 half-message	106	—	—

Notes:
1. The parameters fast correction type identifier, IODFj, and FCi are defined in 3.5.4.4.2.
2. The parameter IODP is defined in 3.5.4.1.
3. The parameter UDREIi is defined in 3.5.4.5.
4. The long-term satellite error correction message is divided into two half-messages. The half message for a velocity code = 0 is defined in Table48. The half message for a velocity code = 1 is defined in Table 49.

Table 48. Type 25 long-term satellite error correction half message (Velocity Code = 0)

Data content	Bits used	Range of values	Resolution
Velocity Code = 0	1	0	1
For 2 Satellites			
PRN mask number	6	0 to 51	1
Issue of data (IODi)	8	0 to 255	1
δ_{xi}	9	±32 m	0 to 255
δ_{yi}	9	±32 m	0.125 m
δ_{zi}	9	±32 m	0.125 m
$\delta a_{i,f0}$	10	$\pm 2^{-22}$ s	2^{-31} s
IODP	2	0 to 3	1
Spare	1	—	—

Notes:
1. The parameters PRN mask number and IODP are defined in 3.5.4.1.
2. All other parameters are defined in 3.5.4.4.1.

Table 49. Type 25 long-term satellite error correction half message (Velocity Code = 1)

Data content	Bits used	Range of values	Resolution
For 1 Satellite			
Velocity Code = 1	1	1	1
PRN mask number	6	0 to 51	1
Issue of data (IODi)	8	0 to 255	1
δx_i	11	±128 m	0.125 m
δy_i	11	±128 m	0.125 m
δz_i	11	±128 m	0.125 m
$\delta a_{i,f0}$	11	$\pm 2_{-21}$ s	2_{-31} s
$\delta \dot{x}_i$	8	±0.0625 m/s	2_{-11} m/s
$\delta \dot{y}_i$	8	±0.0625 m/s	2_{-11} m/s
$\delta \dot{z}_i$	8	±0.0625 m/s	2_{-11} m/s
$\delta a_{i,f1}$	8	$\pm 2_{-32}$ s/s	2_{-39} s/s
Time-of-applicability ($t_{i,LT}$)	13	0 to 86 384 s	16 s
IODP	2	0 to 3	1

Notes. —
1. The parameters PRN mask number and IODP are defined in 3.5.4.1.
2. All other parameters are defined in 3.5.4.4.1.

Table 50. Type 26 ionospheric delay message

Data content	Bits used	Range of values	Resolution
IGP band identifier	4	0 to 10	1
IGP block identifier	4	0 to 13	1
For each of 15 grid points			
IGP vertical delay estimate	9	0 to 63.875 m	0.125 m
Grid ionospheric vertical error indicator (GIVEIi)	4	(see Table 33)	(see Table 33)
IODIk	2	0 to 3	1
Spare	7	—	—

Note: *All parameters are defined in 3.5.4.6.*

Table 51. Type 27 SBAS service message

Data content	Bits used	Range of values	Resolution
Issue of data, service (IODS)	3	0 to 7	1
Number of service messages	3	1 to 8	1
Service message number	3	1 to 8	1
Number of regions	3	0 to 5	1
Priority code	2	0 to 3	1
δUDRE indicator-inside	4	0 to 15	1
δUDRE indicator-outside	4	0 to 15	1
For each of 5 regions			
Coordinate 1 latitude	9	±90°	1°
Coordinate 1 longitude	8	±180°	1°
Coordinate 2 latitude	9	±90°	1°
Coordinate 2 longitude	8	±180°	1°
Region shape	1	—	—
Spare	15	—	—

Note: *All parameters are defined in 3.5.4.9.*

Table 52. Type 63 null message

Data content	Bits used	Range of values	Resolution
Spare	212	—	—

Table 53. Type 28 clock-ephemeris covariance matrix

Data content	Bits used	Range of values	Resolution
IODP	2	0 to 3	1
For two satellites			
PRN mask number	6	0 to 51	1
Scale exponent	3	0 to 7	1
$E_{1,1}$	9	0 to 511	1
$E_{2,2}$	9	0 to 511	1
$E_{3,3}$	9	0 to 511	1
$E_{4,4}$	9	0 to 511	1
$E_{1,2}$	10	±512	1
$E_{1,3}$	10	±512	1
$E_{1,4}$	10	±512	1
$E_{2,3}$	10	±512	1
$E_{2,4}$	10	±512	1
$E_{3,4}$	10	±512	1

Notes. —
1. The parameters PRN mask number and IODP are defined in 3.5.4.1.
2. All other parameters are defined in 3.5.4.10.

3.5.7 NON-AIRCRAFT ELEMENTS

Note 1: *Depending on the level of service offered by a particular SBAS, different functions can be implemented as described in Chapter 3, 3.7.3.4.2.*

Note 2: *The parameters that are referred to in this section are defined in 3.5.4.*

3.5.7.1 GENERAL

3.5.7.1.1 *Required data and broadcast intervals*. SBAS shall broadcast the data required for the supported functions as shown in Table 54. If the SBAS broadcasts data that are not required for a particular function, the requirements for that data supporting other functions shall apply. The maximum interval between broadcasts for all data of each data type provided shall be as defined in Table 54.

3.5.7.1.2 *SBAS radio frequency monitoring.* The SBAS shall monitor the SBAS satellite parameters shown in Table 55 and take the indicated action.

Note: *SBAS may broadcast null messages (Type 63 messages) in each time slot for which no other data are broadcast.*

3.5.7.1.3 *"Do Not Use".* SBAS shall broadcast a "Do Not Use" message (Type 0 message) when necessary to inform users not to use the SBAS satellite ranging function and its broadcast data.

3.5.7.1.4 The Doppler shift in the GEO satellite signal seen at any fixed location within the GEO footprint for any GEO shall not exceed ±450 Hz.

Note: *This maximum Doppler shift corresponds approximately to the maximum GEO satellite orbit inclination that can be supported by the coding ranges for Type 9 and Type 17 messages.*

3.5.7.1.5 *Geostationary orbit (GEO) ranging function parameters.* Each SBAS satellite shall broadcast geostationary orbit (GEO) ranging function parameters (defined in 3.5.4.2).

Note: *It is necessary to broadcast geostationary orbit ranging function parameters even when a ranging function is not provided, so that airborne receivers may implement a positive identification of the broadcasting SBAS satellite. When ranging is not provided, the accuracy of the Type 17 data (and Type 9 data) only needs to support the acquisition of the satellite.*

3.5.7.1.5.1 The error in the Doppler shift of a GEO satellite derived from any Type 9 message that has not timed out, with respect to the true GEO Doppler shift seen at any fixed location within the GEO footprint, shall not exceed ±210 Hz.

3.5.7.1.6 *Almanac data.* Each SBAS satellite shall broadcast almanac data (defined in 3.5.4.3) for all SBAS satellites of the same service provider.

3.5.7.1.6.1 The error in the estimated position of the satellite derived from any Type 17 message broadcast within the previous 15 minutes, with respect to the true satellite position, shall not exceed 3 000 km.

3.5.7.1.6.2 The separation distance between the estimated position of the satellite derived from any Type 17 message broadcast within the previous 15 minutes and the position of the satellite derived from the GEO ranging parameters in any Type 9 message that has not timed out shall not exceed 200 km.

3.5.7.1.6.3 The error in the Doppler shift of a GEO satellite derived from any Type 17 message broadcast within the previous 15 minutes, with respect to the true GEO Doppler shift seen at any fixed location within the GEO footprint, shall not exceed ±210 Hz.

3.5.7.1.6.4 SBAS shall not broadcast almanac data for any SBAS satellite from a different service provider for which the position estimated from the almanac data broadcast within the previous 15 minutes would be within 200 km of the position of any of its own GEOs as derived from the GEO ranging parameters from any Type 9 message that has not timed out.

3.5.7.1.6.5 Where the estimated position of a GEO satellite providing a ranging function, derived from the Type 17 message broadcast within the previous 15 minutes, is within 200 km of the position of another GEO satellite of the same service provider, derived from a Type 9 message for this GEO that has not timed out, the GEO UDRE value shall be set sufficiently large to account for the possibility that a user could misidentify the PRN of the GEO providing the ranging function.

3.5.7.1.6.6 The health and status parameter shall indicate the satellite status and the service provider identifier, as defined in 3.5.4.3.

3.5.7.1.6.7 Unused almanac slots in Type 17 messages shall be coded with a PRN code number of “0”.

3.5.7.1.6.8 The service provider shall ensure the correctness of the service provider ID broadcast in any almanac.

3.5.7.2 *Ranging function*. If an SBAS provides a ranging function, it shall comply with the requirements contained in this section in addition to the requirements of 3.5.7.1.

3.5.7.2.1 *Performance requirements*

Note: *See Chapter 3, 3.7.3.4.2.1.*

3.5.7.2.2 *Ranging function data*. SBAS shall broadcast ranging function data such that the SBAS satellite position error projected on the line-of-sight to any user in the satellite footprint is less than 256 metres. Each SBAS satellite shall broadcast a URA representing an estimate of the standard deviation of the ranging errors referenced to SNT.

3.5.7.3 *GNSS satellite status function*. If an SBAS provides a satellite status function, it shall also comply with the requirements contained in this section.

Note: *An SBAS may be able to provide integrity on some GPS satellites that are designated either marginal or unhealthy.*

3.5.7.3.1 *Performance of satellite status functions*. Given any valid combination of active data, the probability of a horizontal error exceeding the HPL_{SBAS} (as defined in 3.5.5.6) for longer than 8 consecutive seconds shall be less than 10^{-7} in any hour, assuming a user with zero latency.

Note: *Active data is defined to be data that have not timed out per 3.5.8.1.2. This requirement includes core satellite constellation(s) and SBAS failures.*

3.5.7.3.2 *PRN mask and Issue of data — PRN (IODP)*. SBAS shall broadcast a PRN mask and IODP (Type 1 message).

The PRN mask values shall indicate whether or not data are being provided for each GNSS satellite. The IODP shall change when there is a change in the PRN mask. The change of IODP in Type 1 messages shall occur before the IODP changes in any other message. The IODP in Type 2 to 5, 7, 24, 25 and 28 messages shall equal the IODP broadcast in the PRN mask message (Type 1 message) used to designate the satellites for which data are provided in that message.

Table 54. Data broadcast intervals and supported functions

Data type	Maximum broadcasti nterval	Ranging	GNSS satellite status	Basic differential correction	Precise differential correction	Associated message types
Clock-Ephemeris covariance matrix	120 s					28
SBAS in test mode	6s					0
PRN mask	120 s		R	R	R	1
UDREI	6s		R*	R	R	2 to 6, 24
Fast corrections	$I_{fc}/2$ (see *Note 4*)		R*	R	R	2 to 5, 24
Long-term corrections	120 s		R*	R	R	24, 25
GEO ranging function data	120 s	R	R	R	R	9
Fast correction degradation	120 s		R*	R	R	7
Degradation parameters	120 s				R	10
Ionospheric grid mask	300 s				R	18

Data type	Maximum broadcasti nterval	Ranging	GNSS satellite status	Basic differential correction	Precise differential correction	Associated message types
Ionospheric corrections, GIVEI	300 s				R	26
Timing data	300 s	R	R	R	R	12
		(see *Note 4*)	(see *Note 4*)	(see *Note 4*)	(see *Note 4*)	
Almanac data	300 s	R	R	R	R	17
Service level	300 s					27

Notes. —
1. "R" indicates that the data must be broadcast to support the function.
2. "R" indicates special coding as described in 3.5.7.3.3.*
3. Type 12 messages are only required if data are provided for GLONASS satellites.
4. I_{fc} refers to the PA/APV time-out interval for fast corrections, as defined in Table 57.

Table 55. SBAS radio frequency monitoring

Parameter	Reference	Alarm limit	Required action
Signal power level	Chapter 3, 3.7.3.4.4.3	minimum specified power maximum specified power *(Note 2)*	Cease ranging function (*Note 1*). Cease broadcast.
Modulation	Chapter 3, 3.7.3.4.4.5	monitor for waveform distortion	Cease ranging function (*Note 1*).
SNT-to-GPS time	Chapter 3, 3.7.3.4.5	N/A (*Note 3*)	Cease ranging function unless σ_{UDRE} reflects error.
Carrier frequency stability	3.5.2.1	N/A (*Note 3*)	Cease ranging function unless σ_{UDRE} reflects error.
Code/frequency coherence	3.5.2.4	N/A (*Note 3*)	Cease ranging function unless σ_{UDRE} reflects error.
Maximum code phase deviation	3.5.2.6	N/A (*Notes 2* and *3*)	Cease ranging function unless σ_{UDRE} reflects error.
Convolutional encoding	3.5.2.9	all transmit messages are erroneous	Cease broadcast.

Notes. —
1. Ceasing the ranging function is accomplished by broadcasting a URA and σ 2UDRE of "Do Not Use" for that SBAS satellite.
2. These parameters can be monitored by their impact on the received signal quality (C/N0 impact), since that is the impact on the user.
3. Alarm limits are not specified because the induced error is acceptable, provided it is represented in the σ 2UDRE and URA parameters. If the error cannot be represented, the ranging function must cease.

3.5.7.3.2.1 **Recommendation. —** *When the PRN mask is changed, SBAS should repeat the Type 1 message several times before referencing it in other messages to ensure that users receive the new mask.*

3.5.7.3.3 *Integrity data*. If SBAS does not provide the basic differential correction function, it shall transmit fast corrections, long-term corrections and fast correction degradation parameters coded to zero for all visible satellites indicated in the PRN mask.

3.5.7.3.3.1 If SBAS does not provide the basic differential correction function, SBAS shall indicate that the satellite is unhealthy (“Do Not Use”) if the pseudo-range error exceeds 150 metres.

3.5.7.3.3.2 If SBAS does not provide the basic differential correction function, SBAS shall indicate that the satellite is “Not Monitored” if the pseudo-range error cannot be determined.

3.5.7.3.3.3 If SBAS does not provide the basic differential correction function, SBAS shall transmit a UDREIi of 13 if the satellite is not “Do Not Use” or “Not Monitored”.

3.5.7.3.3.4 The IODFj parameter in Type 2 to 5, 6 or 24 messages shall be equal to 3.

3.5.7.4 *Basic differential correction function*. If an SBAS provides a basic differential correction function, it shall comply with the requirements contained in this section in addition to the GNSS satellite status function requirements defined in 3.5.7.3.

3.5.7.4.1 *Performance of basic differential correction function*. Given any valid combination of active data, the probability of a horizontal error exceeding the HPL_{SBAS} (as defined in 3.5.5.6) for longer than 8 consecutive seconds shall be less than 10_{-7} in any hour, assuming a user with zero latency.

Note: *Active data is defined to be data that has not timed out per 3.5.8.1.2. This requirement includes core satellite constellation(s) and SBAS failures.*

3.5.7.4.2 *Long-term corrections*. Except for SBAS satellites from the same service provider, SBAS shall determine and broadcast long-term corrections for each visible GNSS satellite (see *Note*) indicated in the PRN mask (PRN mask value equal to “1”). The long-term corrections shall be such that the core satellite constellation(s) satellite position error projected on the line-of-sight to any user in the satellite footprint after application of these long-term corrections is less than 256 metres. For each GLONASS satellite, SBAS shall translate satellite coordinates into WGS-84 as defined in 3.5.5.2 prior to determining the long-term corrections. For each GPS satellite, the broadcast IOD shall match both the GPS IODE and 8 LSBs of IODC associated with the clock and ephemeris data used to compute the corrections (3.1.1.3.1.4 and 3.1.1.3.2.2). Upon transmission of a new ephemeris by a GPS satellite, SBAS shall continue to use the old ephemeris to determine the fast and long-term error corrections for at least 2 minutes and not more than 4 minutes. For each GLONASS satellite, SBAS shall compute and broadcast an IOD that consists of a latency and a validity interval as defined in 3.5.4.4.1.

Note: *The criteria for satellite visibility include the locations of reference stations and the achieved mask angle at those locations.*

3.5.7.4.2.1 **Recommendation. —** *To ensure accurate range rate corrections, SBAS should minimize discontinuities in the satellite ephemerides after application of long-term corrections.*

3.5.7.4.3 *Fast corrections.* SBAS shall determine fast corrections for each visible GNSS satellite indicated in the PRN mask (PRN mask value equal to "1"). Unless the IODF = 3, each time any fast correction data in Type j (j = 2, 3, 4 or 5) message changes, the $IODF_j$ shall sequence "0, 1, 2, 0, ...".

Note: *If there is an alarm condition, the $IODF_j$ may equal 3 (see 3.5.7.4.5).*

3.5.7.4.4 *Timing data*. If data are provided for GLONASS, SBAS shall broadcast the timing message (Type 12 message) including GLONASS time offset as defined in Table 44.

3.5.7.4.5 *Integrity data*. For each satellite for which corrections are provided, SBAS shall broadcast integrity data (UDREIi and, optionally, Type 27 or 28 message data to calculate δUDRE) such that the integrity requirement in 3.5.7.4.1 is met. If the fast corrections or long-term corrections exceed their coding range, SBAS shall indicate that the satellite is unhealthy ("Do Not Use"). If $\sigma^2_{i,UDRE}$ cannot be determined, SBAS shall indicate that the satellite is "Not Monitored".

If Type 6 message is used to broadcast $\sigma^2_{i,UDRE,}$ then:

a) the IODFj shall match the IODFj for the fast corrections received in Type j message to which the $\sigma^2_{i,UDRE}$ apply; or

b) the IODFj shall equal 3 if the $\sigma^2_{i,UDRE}$ apply to all valid fast corrections received in Type j message which have not timed out.

3.5.7.4.6 *Degradation data*. SBAS shall broadcast degradation parameters (Type 7 message) to indicate the applicable time out interval for fast corrections and ensure that the integrity requirement in 3.5.7.4.1 is met.

3.5.7.5 *Precise differential correction function*. If SBAS provides a precise differential correction function, it shall comply with the requirements contained in this section in addition to the basic differential correction function requirements in 3.5.7.4.

3.5.7.5.1 *Performance of precise differential correction function*. Given any valid combination of active data, the probability of an out-of-tolerance condition for longer than the relevant time-to-alert shall be less than 2×10^{-7} during any approach, assuming a user with zero latency. The time-to-alert shall be 5.2 seconds for an SBAS that supports precision approach operations, and 8 seconds for an SBAS that supports APV or NPA operations. An out-of-tolerance condition shall be defined as a horizontal error exceeding the HPL_{SBAS} or a vertical error exceeding the VPL_{SBAS} (as defined in 3.5.5.6).

When an out-of-tolerance condition is detected, the resulting alert message (broadcast in a Type 2 to 5 and 6, 24, 26 or 27 messages) shall be repeated three times after the initial notification of the alert condition for a total of four times in 4 seconds.

Note 1: *Active data is defined to be data that has not timed out per 3.5.8.1.2. This requirement includes core satellite constellation(s) and SBAS failures.*

Note 2: *Subsequent messages can be transmitted at the normal update rate.*

3.5.7.5.2 *Ionospheric grid point (IGP) mask*. SBAS shall broadcast an IGP mask and $IODI_k$ (up to 11 Type 18 messages, corresponding to the 11 IGP bands). The IGP mask values shall indicate whether or not data are being provided for each IGP. If IGP Band 9 is used, then the IGP mask values for IGPs north of 55°N in Bands 0 through 8 shall be

set to “0”. If IGP Band 10 is used, then the IGP mask values for IGPs south of 55°S in Bands 0 through 8 shall be set to “0”. The $IODI_k$ shall change when there is a change of IGP mask values in the kth band. The new IGP mask shall be broadcast in a Type 18 message before it is referenced in a related Type 26 message. The $IODI_k$ in Type 26 message shall equal the $IODI_k$ broadcast in the IGP mask message (Type 18 message) used to designate the IGPs for which data are provided in that message.

3.5.7.5.2.1 **Recommendation. —** *When the IGP mask is changed, SBAS should repeat the Type 18 message several times before referencing it in a Type 26 message to ensure that users receive the new mask. The same IODIk should be used for all bands.*

3.5.7.5.3 *Ionospheric corrections*. SBAS shall broadcast ionospheric corrections for the IGPs designated in the IGP mask (IGP mask values equal to “1”).

3.5.7.5.4 *Ionospheric integrity data*. For each IGP for which corrections are provided, SBAS shall broadcast GIVEI data such that the integrity requirement in 3.5.7.5.1 is met. If the ionospheric correction or $\sigma^2_{i,GIVE}$ exceed their coding range, SBAS shall indicate the status “Do Not Use” (designated in the correction data, 3.5.4.6) for the IGP. If $\sigma^2_{i,GIVE}$ cannot be determined, SBAS shall indicate that the IGP is “Not Monitored” (designated in the GIVEI coding).

3.5.7.5.5 *Degradation data*. SBAS shall broadcast degradation parameters (Type 10 message) such that the integrity requirement in 3.5.7.5.1 is met.

3.5.7.6 OPTIONAL FUNCTIONS

3.5.7.6.1 *Timing data*. If UTC time parameters are broadcast, they shall be as defined in 3.5.4.8 (Type 12 message).

3.5.7.6.2 *Service indication*. If service indication data are broadcast, they shall be as defined in 3.5.4.9 (Type 27 message) and Type 28 messages shall not be broadcast. The IODS in all Type 27 messages shall increment when there is a change in any Type 27 message data.

3.5.7.6.3 *Clock-ephemeris covariance matrix*. If clock-ephemeris covariance matrix data are broadcast, they shall be broadcast for all monitored satellites as defined in 3.5.4.10 (Type 28 message) and Type 27 messages shall not be broadcast.

3.5.7.7 MONITORING

3.5.7.7.1 *SBAS radio frequency monitoring.* The SBAS shall monitor the SBAS satellite parameters shown in Table 55 and take the indicated action.

Note: *In addition to the radio frequency monitoring requirements in this section, it will be necessary to make special provisions to monitor pseudo-range acceleration specified in Chapter 3, 3.7.3.4.2.1.5, and carrier phase noise specified in 3.5.2.2 and correlation loss in 3.5.2.5, unless analysis and testing shows that these parameters cannot exceed the stated limits.*

3.5.7.7.2 *Data monitoring.* SBAS shall monitor the satellite signals to detect conditions that will result in improper operation of differential processing for airborne receivers with the tracking performance defined in GM on application GNSS standards and recommended practices, 8.11.

3.5.7.7.2.1 The ground subsystem shall use the strongest correlation peak in all receivers used to generate the pseudorange corrections.

3.5.7.7.2.2 The ground subsystem shall also detect conditions that cause more than one zero crossing for airborne receivers that use the Early-Late discriminator function as in GM on application GNSS standards and recommended practices D, 8.11.

3.5.7.7.2.3 The monitor action shall be to set UDRE to “Do Not Use” for the satellite.

3.5.7.7.2.4 SBAS shall monitor all active data that can be used by any user within the service area.

3.5.7.7.2.5 SBAS shall raise an alarm within 5.2 seconds if any combination of active data and GNSS signals-in-space results in an out-of-tolerance condition for precision approach (3.5.7.5.1).

3.5.7.7.2.6 SBAS shall raise an alarm within 8 seconds if any combination of active data and GNSS signals-in-space results in an out-of-tolerance condition for en-route through APV I (3.5.7.4.1).

Note: *The monitoring applies to all failure conditions, including failures in core satellite constellation(s) or SBAS satellites. This monitoring assumes that the aircraft element complies with the requirements of RTCA/DO-229D with Change 1, except as superseded by 3.5.8 and GM on application GNSS standards and recommended practices, 8.11.*

3.5.7.7.3 *IOD monitoring.* SBAS shall monitor the GPS IODE values for possible invalidtransmissions of values used previously for a different set of ephemeris parameters within the time interval(s) specified in 3.1.1.3.2.2, and take appropriate action to ensure the integrity of its broadcast corrections, if such an invalid use is detected.

Note 1: *The IOD uniqueness is granted by design in the case of SBAS augmenting GLONASS satellites.*

Note 2: *The GPS IODC (as per section 3.1.1.3.1.4) is not currently used in the processing of GPS L1 navigation messages in an SBAS receiver mode. Therefore, monitoring is not specifically required.*

3.5.7.8 *Robustness to core satellite constellation(s) failures*. Upon occurrence of a core satellite constellation(s) satellite anomaly, SBAS shall continue to operate normally using the available healthy satellite signals that can be tracked.

3.5.8 AIRCRAFT ELEMENTS

Note 1: *The parameters that are referred to in this section are defined in 3.5.4.*

Note 2: *Some of the requirements of this section may not apply to equipment that integrates additional navigation sensors, such as equipment that integrates SBAS with inertial navigation sensors.*

3.5.8.1 *SBAS-capable GNSS receiver*. Except as specifically noted, the SBAS-capable GNSS receiver shall process the signals of the SBAS and meet the requirements specified in 3.1.3.1 (GPS receiver) and/or 3.2.3.1 (GLONASS receiver).Pseudo-range measurements for each satellite shall be smoothed using carrier measurements and a smoothing filter which deviates less than 0.25 metre within 200 seconds after initialization, relative to the steady-state response of the filter defined in 3.6.5.1 in the presence of drift between the code phase and integrated carrier phase of up to 0.018 metre per second.

3.5.8.1.1 *GEO satellite acquisition*. The receiver shall be able to acquire and track GEO satellites for which a stationary receiver at the user receiver location would experience a Doppler shift as large as ±450 Hz.

3.5.8.1.2 *Conditions for use of data*. The receiver shall use data from an SBAS message only if the CRC of this message has been verified. Reception of a Type 0 message from an SBAS satellite shall result in deselection of that satellite for at least one minute and all data from that satellite shall be discarded, except that there is no requirement to discard data from Type 12 and Type 17 messages. For GPS satellites, the receiver shall apply long-term corrections only if the IOD matches both the IODE and 8 least significant bits of the IODC. For GLONASS satellites, the receiver shall apply long-term corrections only if the time of reception (t_r) of the GLONASS ephemeris is inside the following IOD validity interval, as defined in 3.5.4.4.1:

$$t_{LT} - L - V \leq t_r \leq t_{LT} - L$$

Note 1: *For SBAS satellites, there is no mechanism that links GEO ranging function data (Type 9 message) and longterm corrections.*

Note 2: *This requirement does not imply that the receiver has to stop tracking the SBAS satellite.*

3.5.8.1.2.1 *SBAS satellite identification.* Upon acquisition or re-acquisition of an SBAS satellite, the receiver shall not use SBAS satellite data unless the calculated separation between the satellite position derived from its GEO ranging function parameters and the satellite position derived from the almanac message most recently received from the same service provider within the last 15 minutes is less than 200 km.

Note: *This check ensures that a receiver will not mistake one SBAS satellite for another due to cross-correlation during acquisition or re-acquisition.*

3.5.8.1.2.2 The receiver shall use integrity or correction data only if the IODP associated with that data matches the IODP associated with the PRN mask.

3.5.8.1.2.3 The receiver shall use SBAS-provided ionospheric data (IGP vertical delay estimate and $GIVEI_i$) only if the IODIk associated with that data in a Type 26 message matches the $IODI_k$ associated with the relevant IGP band mask transmitted in a Type 18 message.

3.5.8.1.2.4 The receiver shall use the most recently received integrity data for which the IODFj equals 3 or the IODFj matches the IODFj associated with the fast correction data being applied (if corrections are provided).

3.5.8.1.2.5 The receiver shall apply any regional degradation to the $\sigma_{2i,UDRE}$ as defined by a Type 27 service message. If a Type 27 message with a new IODS indicates a higher δ_{UDRE} for the user location, the higher δ_{UDRE} shall be applied immediately.A lower δ_{UDRE} in a new Type 27 message shall not be applied until the complete set of messages with the new IODS has been received.

3.5.8.1.2.6 The receiver shall apply satellite-specific degradation to the $\sigma^2_{i,UDRE}$ as defined by a Type 28 clockephemeris covariance matrix message. The δ_{UDRE} derived from a Type 28 message with an IODP matching that of the PRN mask shall be applied immediately.

3.5.8.1.2.7 In the event of a loss of four successive SBAS messages during an SBAS-based approach operation with a HAL of 40 m or a VAL of 50 m or less, the receiver shall invalidate all UDREI data from that SBAS satellite.

3.5.8.1.2.8 The receiver shall not use a broadcast data parameter after it has timed out as defined in Table 56.

3.5.8.1.2.9 The receiver shall not use a fast correction if Δt for the associated RRC exceeds the time-out interval for fast corrections, or if the age of the RRC exceeds 8Δt.

3.5.8.1.2.10 The calculation of the RRC shall be reinitialized if a “Do Not Use” or “Not Monitored” indication is received for that satellite.

3.5.8.1.2.11 For SBAS-based precision approach or APV operations, the receiver shall only use satellites with elevation angles at or above 5 degrees.

3.5.8.1.2.12 The receiver shall no longer support SBAS-based precision approach or APV operation using a particular satellite if the UDREIi received is greater than or equal to 12.

Table 56. Data time-out intervals

Data	Associated message types	En-route, terminal, NPA time-out	Precision approach, APV time-out
Clock-ephemeris covariance matrix	28	360	240
SBAS in test mode	0	N/A	N/A
PRN mask	1	600 s	600 s
UDREI	2 to 6, 24	18 s	12 s
Fast corrections	2 to 5, 24	(see Table 57)	(see Table 57)
Long-term corrections	24, 25	360 s	240 s
GEO ranging function data	9	360 s	240 s
Fast correction degradation	7	360 s	240 s
Degradation parameters	10	360 s	240 s
Ionospheric grid mask	18	1 200 s	1 200 s
Ionospheric corrections, GIVEI	26	600 s	600 s
Timing data	12	86 400 s	86 400 s
GLONASS time offset	12	600 s	600 s
Almanac data	17	None	None
Service level	27	86 400 s	86 400 s

Note: *The time-out intervals are defined from the end of the reception of a message.*

Table 57. Fast correction time-out interval evaluation

Fast correction degradation factor indicator (aii)	NPA time-out interval for fast corrections (Ifc)	PA/APV time-out interval for fast corrections (Ifc)
0	180 s	120 s
1	180 s	120 s
2	153 s	102 s
3	135 s	90 s
4	135 s	90 s
5	117 s	78 s
6	99 s	66 s
7	81 s	54 s

Fast correction degradation factor indicator (aii)	NPA time-out interval for fast corrections (Ifc)	PA/APV time-out interval for fast corrections (Ifc)
8	63 s	42 s
9	45 s	30 s
10	45 s	30 s
11	27 s	18 s
12	27 s	18 s
13	27 s	18 s
14	18 s	12 s
15	18 s	12 s

3.5.8.2 *RANGING FUNCTION*

3.5.8.2.1 *Precision approach and APV operations*. The root-mean-square (1 sigma) of the total airborne error contribution to the error in a corrected pseudo-range for an SBAS satellite at the minimum received signal power level (Chapter 3, 3.7.3.4.4.3) under the worst interference environment as defined in 3.7 shall be less than or equal to 1.8 metres, excluding multipath effects, tropospheric and ionospheric residual errors.

Note: *The aircraft element will bound the errors caused by multipath and troposphere (3.5.8.4.1). For the purpose of predicting service, the multipath error is assumed to be less than 0.6 metres (1 sigma).*

3.5.8.2.2 *Departure, en-route, terminal, and non-precision approach operations*. The root-mean-square (1 sigma) of the total airborne contribution to the error in a corrected pseudo-range for an SBAS satellite at the minimum received signal power level (Chapter 3, 3.7.3.4.4.3) under the worst interference environment as defined in 3.7 shall be less than or equal to 5 metres, excluding multipath, tropospheric and ionospheric errors.

3.5.8.2.3 *SBAS satellite position*

3.5.8.2.3.1 *Position computation*. The receiver shall decode Type 9 message and determine the code phase offset and position (X_G, Y_G, Z_G) of the SBAS satellite.

3.5.8.2.3.2 *SBAS satellite identification*. The receiver shall discriminate between SBAS satellites.

Note: *This requirement applies to false acquisition of a satellite due to cross-correlation.*

3.5.8.2.4 *Almanac data*

3.5.8.2.4.1 **Recommendation. —** *The almanac data provided by the SBAS should be used for acquisition.*

Note: *Health and status information provided in the GEO almanac data does not override or invalidate data provided in other SBAS messages. The use of bits 0 to 2 by airborne equipment is optional; there are no requirements covering their usage.*

3.5.8.3 *GNSS satellite status function*. The receiver shall exclude satellites from the position solution if they are identified as “Do Not Use” by SBAS. If SBAS-provided integrity is used, the receiver shall not be required to exclude GPS satellites based on the GPS-provided ephemeris health flag as required in 3.1.3.1.1 or to exclude GLONASS satellites based on GLONASS-provided ephemeris health flag as required in 3.2.3.1.1.

Note 1: *In the case of a satellite designated marginal or unhealthy by the core satellite constellation(s) health flag, SBAS may be able to broadcast ephemeris and clock corrections that will allow the user to continue using the satellite.*

Note 2: *If satellites identified as "Not Monitored" by SBAS are used in the position solution, integrity is not provided by SBAS. ABAS or GBAS may be used to provide integrity, if available.*

3.5.8.4 *BASIC AND PRECISE DIFFERENTIAL FUNCTIONS*

3.5.8.4.1 *Core satellite constellation(s) ranging accuracy.* The root-mean-square (1 sigma) of the total airborne contribution to the error in a corrected pseudo-range for a GPS satellite at the minimum and maximum received signal power level (Chapter 3, 3.7.3.1.7.4) under the worst interference environment as defined in 3.7 shall be less than or equal to 0.36 metres for minimum signal level and 0.15 metres for maximum signal level, excluding multipath effects, tropospheric and ionospheric residual errors. The RMS of the total airborne contribution to the error in a corrected pseudo-range for a GLONASS satellite at the minimum received signal power level (Chapter 3, 3.2.5.4) under the worst interference environment as defined in 3.7 shall be less than or equal to 0.8 metres, excluding multipath effects, tropospheric and ionospheric residual errors.

3.5.8.4.2 *Precision approach and APV operations*

3.5.8.4.2.1 The receiver shall obtain correction and integrity data for all satellites in the position solution from the same SBAS signal (PRN code).

3.5.8.4.2.2 The receiver shall compute and apply long-term corrections, fast corrections, range rate corrections and the broadcast ionospheric corrections. For GLONASS satellites, the ionospheric corrections received from the SBAS shall be multiplied by the square of the ratio of GLONASS to GPS frequencies $(fGLONASS/fGPS)^2$.

3.5.8.4.2.3 The receiver shall use a weighted-least-squares position solution.

3.5.8.4.2.4 The receiver shall apply a tropospheric model such that residual pseudo-range errors have a mean value (μ) less than 0.15 metres and a 1 sigma deviation less than 0.07 metres.

Note: *A model was developed that meets this requirement. Guidance is provided in GM on application GNSS standards and recommended practices, 6.5.4.*

3.5.8.4.2.5 The receiver shall compute and apply horizontal and vertical protection levels defined in 3.5.5.6. In this computation, $\sigma_{i,tropo}$ shall be:

$$\frac{1.001}{\sqrt{0.002001 + \sin^2(\theta_i)}} \times 0.12 \text{ m}$$

where θ_i is the elevation angle of the i_{th} satellite. In addition, $\sigma_{i,air}$ shall satisfy the condition that a normal distribution with zero mean and a standard deviation equal to σi,air bounds the error distribution for residual aircraft pseudo-range errors as follows:

$$\int_y^\infty f_n(x)dx \le Q\left(\frac{y}{\sigma}\right) \text{ for all } \frac{y}{\sigma} \ge 0 \text{ and}$$

$$\int_{-\infty}^{-y} f_n(x)dx \leq Q\left(\frac{y}{\sigma}\right) \text{ for all } \frac{y}{\sigma} \geq 0$$

where

$f_i(x)$ = probability density function of the residual aircraft pseudo-range error and

$$Q(x) = \frac{1}{\sqrt{2\pi}} \int_x^{\infty} e^{-\frac{t^2}{2}} dt$$

Note: *The standard allowance for airborne multipath defined in 3.6.5.5.1 may be used to bound the multipath errors.*

3.5.8.4.2.6 The parameters that define the approach path for a single precision approach or APV shall be contained in the FAS data block.

Note 1: *The FAS path is a line in space defined by the landing threshold point/fictitious threshold point (LTP/FTP), flight path alignment point (FPAP), threshold crossing height (TCH) and glide path angle (GPA). The local level plane for the approach is a plane perpendicular to the local vertical passing through the LTP/FTP (i.e. tangent to the ellipsoid at the LTP/FTP). Local vertical for the approach is normal to the WGS-84 ellipsoid at the LTP/FTP. The glide path intercept point (GPIP) is where the final approach path intercepts the local level plane.*

Note 2: *For SBAS, FAS data blocks are stored in airborne databases. The format of the data for validation of a cyclic redundancy check is shown in GM on application GNSS standards and recommended practices D, 6.6. It differs from the GBAS FAS data block in 3.6.4.5.*

3.5.8.4.2.6.1 FAS data block parameters shall be as follows (see Table 57A):

Operation type: straight-in approach procedure or other operation types.

Coding:

0 = straight-in approach procedure
1 to 15 = spare

SBAS service provider ID: indicates the service provider associated with this FAS data block.

Coding: See Table 27.
14 = FAS data block is to be used with GBAS only.
15 = FAS data block can be used with any SBAS service provider.

Airport ID: the three- or four-letter designator used to designate an airport.

Coding: Each character is coded using the lower 6 bits of its IA-5 representation. For each character, b1 is transmitted first, and 2 zero bits are appended after b_6, so that 8 bits are transmitted for each character. Only upper case letters, numeric digits and IA-5 “space” are used. The rightmost character is transmitted first. For a three-character airport ID, the rightmost (first transmitted) character shall be IA-5 “space”.

Runway number: the runway orientation, point-in-space final approach course, or SBAS circling only procedure course rounded to the nearest 10 degrees and truncated to two characters.

Coding: 01 to 36 = runway number

Note: *For heliport operations, the runway number value is the integer nearest to one tenth of the final approach course, except when that integer is zero, in which case the runway number is 36.*

Runway letter: the one-letter designator used, as necessary, to differentiate between parallel runways.

Coding: 0 = no letter
1 = R (right)
2 = C (centre)
3 = L (left)

Approach performance designator: this field is not used by SBAS.

Table 57A. Final approach segment (FAS) data block

Data content	Bits used	Range of values	Resolution
Operation type	4	0 to 15	1
SBAS service provider ID	4	0 to 15	1
Airport ID	32	—	—
Runway number	6	01 to 36	1
Runway letter	2	—	—
Approach performance designator	3	0 to 7	1
Route indicator	5	—	—
Reference path data selector	8	0 to 48	1
Reference path identifier	32	—	—
LTP/FTP latitude	32	±90.0°	0.0005 arcsec
LTP/FTP longitude	32	±180.0°	0.0005 arcsec
LTP/FTP height	16	–512.0 to 6 041.5 m	0.1 m
ΔFPAP latitude	24	±1.0°	0.0005 arcsec
ΔFPAP longitude	24	±1.0°	0.0005 arcsec
Approach TCH (*Note 1*)	15	0 to 1 638.35 m or	0.05 m or
		0 to 3 276.7 ft	0.1 ft
Approach TCH units selector	1	—	—
Glide path angle (GPA)	16	0 to 90.0°	0.01°
Course width	8	80 to 143.75 m	0.25 m
ΔLength offset	8	0 to 2 032 m	8 m
Horizontal alert limit (HAL)	8	0 to 51.0 m	0.2 m
Vertical alert limit (VAL) (*Note 2*)	8	0 to 51.0 m	0.2 m
Final approach segment CRC	32		—

Note 1: *Information can be provided in either feet or metres as indicated by the approach TCH unit selector.*

Note 2: *A VAL of 0 indicates that the vertical deviations cannot be used (i.e., a lateral only approach). This does not preclude providing advisory vertical guidance on such approaches, refer to FAA AC 20-138.*

Route indicator: a “blank” or the one-letter identifier used to differentiate between multiple procedures to the same runway end.

Note: *Procedures are considered to be different even if they only differ by the missed approach segment.*

Coding: The letter is coded using bits b1 through b5 of its IA-5 representation. Bit b1 is transmitted first. Only upper case letters, excluding "I" and "O", or IA-5 "space" (blank) are used. Blank indicates that there is only one procedure to the runway end. For multiple procedures to the same runway end, the route indicator is coded using a letter starting from Z and moving backward in the alphabet for additional procedures.

Reference path data selector (RPDS): this field is not used by SBAS.

Reference path identifier (RPI): four characters used to uniquely designate the reference path. The four characters consist of three alphanumeric characters plus a blank or four alphanumeric characters.

***Note**: The best industry practice matches the 2nd and 3rd character encoding to the encoded runway number. The last character is a letter starting from A or a "blank."*

Coding: Each character is coded using bits b1 through b6 of its IA-5 representation. For each character, b1 is transmitted first, and 2 zero bits are appended after b6 so that 8 bits are transmitted for each character. Only upper case letters, numeric digits and IA-5 "space" are used. The rightmost character is transmitted first. For a three-character reference path identifier, the rightmost (first transmitted) character shall be IA-5 "space".

***Note:** The LTP/FTP is a point over which the FAS path passes at a height above the LTP/FTP height specified by the TCH.*

LTP/FTP latitude: the latitude of the LTP/FTP point in arc seconds.

Coding: positive value denotes north latitude.
negative value denotes south latitude.

LTP/FTP longitude: the longitude of the LTP/FTP point in arc seconds.

Coding: positive value denotes east longitude.
negative value denotes west longitude.

LTP/FTP height: the height of the LTP/FTP above the WGS-84 ellipsoid.

Coding: This field is coded as an unsigned fixed-point number with an offset of –512 metres. A value of zero in this field places the LTP/FTP 512 metres below the earth ellipsoid.

***Note:** The FPAP is a point at the same height as the LTP/FTP that is used to define the alignment of the approach. The origin of angular deviations in the lateral direction is defined to be 305 metres (1 000 ft) beyond the FPAP along the lateral FAS path. For an approach aligned with the runway, the FPAP is at or beyond the stop end of the runway.*

∆*FPAP latitude:* the difference of latitude of the runway FPAP from the LTP/FTP in arc seconds.

Coding: Positive value denotes the FPAP latitude north of LTP/FTP latitude. Negative value denotes the FPAP latitude south of the LTP/FTP latitude.

∆*FPAP longitude:* the difference of longitude of the runway FPAP from the LTP/FTP in arc seconds.

Coding: Positive value indicates the FPAP longitude east of LTP/FTP longitude. Negative value indicates the FPAP longitude west of LTP/FTP longitude.

Approach TCH: the height of the FAS path above the LTP/FTP defined in either feet or metres as indicated by the TCH units selector.

Approach TCH units selector: the units used to describe the TCH.

Coding: 0 = feet
1 = metres

Glide path angle (GPA): the angle of the FAS path with respect to the horizontal plane tangent to the WGS-84 ellipsoid at the LTP/FTP.

Course width: the lateral displacement from the path defined by the FAS at the LTP/FTP at which full-scale deflection of a course deviation indicator is attained.

Coding: This field is coded as an unsigned fixed-point number with an offset of 80 metres. A value of zero in this field indicates a course width of 80 metres at the LTP/FTP.

ΔLength offset: the distance from the stop end of the runway to the FPAP.

Coding: 1111 1111 = not provided

HAL: Horizontal alert limit to be used during the approach in metres.

VAL: Vertical alert limit to be used during the approach in metres.

Final approach segment CRC: the 32-bit CRC appended to the end of each FAS data block in order to ensure approach data integrity. The 32-bit final approach segment CRC shall be calculated in accordance with 3.9. The length of the CRC code shall be k = 32 bits.

The CRC generator polynomial shall be:

$G(x) = x^{32} + x^{31} + x^{24} + x^{22} + x^{16} + x^{14} + x^{8} + x^{7} + x^{5} + x^{3} + x + 1$

The CRC information field, M(x), shall be:

$$M(x) = \sum_{i=1}^{288} m_i x^{288-i} = m_1 x^{287} + m_2 x^{286} + \ldots + m_{288} x^0$$

M(x) shall be formed from all bits of the associated FAS data block, excluding the CRC. Bits shall be arranged in the order transmitted, such that m1 corresponds to the LSB of the operation type field, and m288 corresponds to the MSB of the Vertical Alert Limit (VAL) field. The CRC shall be ordered such that r1 is the LSB and r32 is the MSB.

3.5.8.4.2.6.2 For precision approach and APV operations, the service provider ID broadcast Type 17 message shall be identical to the service provider ID in the FAS data block, except if ID equals 15 in the FAS data block.

Note: *If the service provider ID in the FAS data block equals 15, then any service provider can be used. If the service provider ID in the FAS data block equals 14, then SBAS precise differential corrections cannot be used for the approach.*

3.5.8.4.2.6.3 *SBAS FAS data points accuracy.* The survey error of all the FAS data points, relative to WGS-84, shall be less than 0.25 metres vertical and 1 metre horizontal.

3.5.8.4.3 *Departure, en-route, terminal, and non-precision approach operations*

3.5.8.4.3.1 The receiver shall compute and apply long-term corrections, fast corrections and range rate corrections.

3.5.8.4.3.2 The receiver shall compute and apply ionospheric corrections.

Note: *Two methods of computing ionospheric corrections are provided in 3.1.2.4 and 3.5.5.5.2.*

3.5.8.4.3.3 The receiver shall apply a tropospheric model such that residual pseudo-range errors have a mean value (μ) less than 0.15 metres and a standard deviation less than 0.07 metres.

Note: *A model was developed that meets this requirement. Guidance is in GM on application GNSS standards and recommended practices, 6.5.4.*

3.5.8.4.3.4 The receiver shall compute and apply horizontal and vertical protection levels as defined in 3.5.5.6. In this computation, σ_{tropo} shall be obtained either from the formula in 3.5.8.4.2.5, which can be used for elevation angles not less than 4 degrees, or from the alternate formula below, which can be used for elevation angles not less than 2 degrees:

$$\frac{1.001}{\sqrt{0.002001 + \sin^2(\theta_i)}} \times (1 + 0.015 \times (\max(0, 4 - \theta_i))^2) \times 0.12 \text{ m}$$

where θ_i is the elevation angle of the ith satellite.

In addition, $\sigma_{i,air}$ shall satisfy the condition that a normal distribution with zero mean and standard deviation equal to $\sigma_{i,air}$ bounds the error distribution for residual aircraft pseudo-range errors as follows:

$$\int_{y}^{\infty} f_i(x)dx \leq Q\left(\frac{y}{\sigma}\right) \text{ for all } \frac{y}{\sigma} \geq 0 \text{ and}$$

$$\int_{-\infty}^{-y} f_i(x)dx \leq Q\left(\frac{y}{\sigma}\right) \text{ for all } \frac{y}{\sigma} \geq 0$$

where

$f_i(x)$ = probability density function of the residual aircraft pseudo-range error and

$$Q(x) = \frac{1}{\sqrt{2\pi}} \int_{x}^{\infty} e^{-\frac{t^2}{2}} dt$$

Note: *The standard allowance for airborne multipath defined in 3.6.5.5.1 may be used to bound the multipath errors.*

3.5.8.4.4 **Recommendation. —** *For departure, en-route, terminal, and non-precision approach operations, the receiver should use the broadcast ionospheric corrections, when available, and a tropospheric model with performance equal to that specified in 3.5.8.4.3.*

3.5.9 INTERFACE BETWEEN SBAS

Note: *Guidance material on the interface between different SBAS service providers is given in GM on application GNSS standards and recommended practices, 6.3.*

3.6 GROUND-BASED AUGMENTATION SYSTEM (GBAS) AND GROUND-BASED REGIONAL AUGMENTATION SYSTEM (GRAS)

Note: *In this section, except where specifically annotated, reference to approach with vertical guidance (APV) means APV-I and APV-II.*

3.6.1 GENERAL

The GBAS shall consist of a ground subsystem and an aircraft subsystem. The GBAS ground subsystem shall provide data and corrections for the GNSS ranging signals over a digital VHF data broadcast to the aircraft subsystem. The GRAS ground subsystem shall consist of one or more GBAS ground subsystems.

Note: *Material is provided in in GM on application GNSS standards and recommended practices, 7.1.*

3.6.2 RF CHARACTERISTICS

3.6.2.1 *Carrier frequency stability*. The carrier frequency of the data broadcast shall be maintained within ±0.0002 per cent of the assigned frequency.

3.6.2.2 *Bit-to-phase-change encoding*. GBAS messages shall be assembled into symbols, each consisting of 3 consecutive message bits. The end of the message shall be padded by 1 or 2 fill bits if necessary to form the last 3-bit symbol of the message. Symbols shall be converted to D8PSK carrier phase shifts (Δφk) in accordance with Table 58.

Note: *The carrier phase for the kth symbol (φ_k) is given by: $\varphi_k = \varphi_{k-1} + \Delta\varphi_k$. The D8PSK signal may be produced as shown in Figure 19 by combining two quadrature RF signals which are independently suppressed-carrier amplitudemodulated by base band filtered impulses. A positive increase in $\Delta\varphi_k$ represents a counterclockwise rotation in the complex I-Q plane of Figure 19.*

3.6.2.3 *Modulation wave form and pulse shaping filters*. The output of differential phase encoder shall be filtered by a pulse shaping filter whose output, s(t), is described as follows:

$$s(t) = \sum_{k=-\infty}^{k=\infty} e^{j\phi_k} h\,(t - kT)$$

where

h = the impulse response of the raised cosine filter;

φ_k = (as defined in 3.6.2.2);

t = time; and

T = the duration of each symbol = 1/10 500 second.

This pulse shaping filter shall have a nominal complex frequency response of a raised-cosine filter with α = 0.6. The time response, h(t), and frequency response, H(f), of the base band filters shall be as follows:

$$h(t)=\frac{\sin\left(\frac{\pi t}{T}\right)\cos\left(\frac{\pi\alpha t}{T}\right)}{\frac{\pi t}{T}\left[1-\left(\frac{2\alpha t}{T}\right)^2\right]}$$

$$H(f)=\begin{cases}1 & \text{for} \quad 0\le f<\frac{1-\alpha}{2T}\\ \frac{1-\sin\left(\frac{\pi}{2\alpha}(2fT-1)\right)}{2} & \text{for} \quad \frac{1-\alpha}{2T}\le f\le\frac{1+\alpha}{2T}\\ 0 & \text{for} \quad f>\frac{1+\alpha}{2T}\end{cases}$$

The output s(t) of the pulse shaping filter shall modulate the carrier.

3.6.2.4 *Error vector magnitude.* The error vector magnitude of the transmitted signal shall be less than 6.5 per cent root-mean-square (1 sigma).

3.6.2.5 *RF data rate*. The symbol rate shall be 10 500 symbols per second ±0.005 per cent, resulting in a nominal bit rate of 31 500 bits per second.

Table 58. Data encoding

Message bits			Symbol phase shift
I_{3k-2}	I_{3k-1}	I_{3k}	$\Delta\varphi_k$
0	0	0	0π/4
0	0	1	1π/4
0	1	1	2π/4
0	1	0	3π/4
1	1	0	4π/4
1	1	1	5π/4
1	0	1	6π/4
1	0	0	7π/4

Note: *I_j is the jth bit of the burst to be transmitted, where I_1 is the first bit of the training sequence.*

3.6.2.6 *Emissions in unassigned time slots*. Under all operating conditions, the maximum power over a 25 kHz channel bandwidth, centred on the assigned frequency, when measured over any unassigned time slot, shall not exceed –105 dBc referenced to the authorized transmitter power.

Note: *If the authorized transmitter power is higher than 150 W, the –105 dBc may not protect reception of emissions in a slot assigned to another desired transmitter for receivers within 200 metres from the undesired transmitting antenna.*

3.6.3 DATA STRUCTURE

3.6.3.1 *TRANSMITTER TIMING*

3.6.3.1.1 *Data broadcast timing structure*. The time division multiple access (TDMA) timing structure shall be based on frames and time slots. Each frame shall be 500 milliseconds in duration. There shall be 2 such frames contained in each 1-second UTC epoch. The first of these frames shall start at the beginning of the UTC epoch and the second frame shall start 0.5 seconds after the beginning of the UTC epoch. The frame shall be time division multiplexed such that it shall consist of 8 individual time slots (A to H) of 62.5-millisecond duration.

3.6.3.1.2 *Bursts*. Each assigned time slot shall contain at most 1 burst. To initiate the use of a time slot, the GBAS shall broadcast a burst in that time slot in each of 5 consecutive frames. For each time slot in use, the ground subsystem shall broadcast a burst in at least 1 frame of every 5 consecutive frames.

Note 1: *Bursts contain one or more messages and may be of variable length up to the maximum allowed within the slot as required by 3.6.3.2.*

Note 2: *During time slot initiation, the airborne receiver may not receive the first 4 bursts.*

3.6.3.1.3 *Timing budget for bursts*

3.6.3.1.3.1 Each burst shall be contained in a 62.5-millisecond time slot.

3.6.3.1.3.2 The beginning of the burst shall occur 95.2 microseconds after the beginning of the time slot with a tolerance of ±95.2 microseconds.

3.6.3.1.3.3 For GBAS/E equipment, the start of the synchronization and ambiguity resolution portion of the burst, transmitted with horizontal polarization (HPOL), shall occur within 10 microseconds of the start of the burst transmitted with vertical polarization (VPOL).

Note: *Table 59 illustrates the burst timing.*

3.6.3.1.4 *Ramp-up and transmitter power stabilization*. The transmitter shall ramp up to 90 per cent of the steady-state power level within 190.5 microseconds after the beginning of the burst (2 symbols). The transmitter shall stabilize at the steady-state power within 476.2 microseconds after the beginning of the burst (5 symbols).

Note: *The transmitter power stabilization period may be used by the aircraft receiver to settle its automatic gain control.*

3.6.3.1.5 *Ramp-down*. After the final information symbol is transmitted in an assigned time slot, the transmitter output power level shall decrease to at least 30 dB below the steady-state power within 285.7 microseconds (3 symbols).

3.6.3.2 *Burst organization and coding*. Each burst shall consist of the data elements shown in Table 60. Encoding of the messages shall follow the sequence: application data formatting, training sequence forward error correction (FEC) generation, application FEC generation and bit scrambling.

3.6.3.2.1 *Synchronization and ambiguity resolution*. The synchronization and ambiguity resolution field shall consist of the 48-bit sequence shown below, with the rightmost bit transmitted first:

010 001 111 101 111 110 001 100 011 101 100 000 011 110 010 000

Table 59. Burst timing

Event	Nominal event duration	Nominal percentage of steady-state power
Ramp-up	190.5 µs	0% to 90%
Transmitter power stabilization	285.7 µs	90% to 100%
Synchronization and ambiguity resolution	1 523.8 µs	100%
Transmission of scrambled data	58 761.9 µs	100%
Ramp-down	285.7 µs (*Note 1*)	100% to 0%

Notes. —

1. Event duration indicated for transmission of scrambled data is for maximum application data length of 1 776 bits, 2 fill bits and nominal symbol duration.

2. These timing requirements provide a propagation guard time of 1 259 microseconds, allowing for a one-way propagation range of approximately 370 km (200 NM).

3. Where bursts from a GBAS broadcast antenna can be received at a range more than 370 km (200 NM) greater than the range from another broadcast antenna using the next adjacent slot, a longer guard time is required to avoid loss of both bursts. To provide a longer guard time, it is necessary to limit the application data length of the first burst to 1 744 bits. This allows a difference in propagation ranges of up to 692 km (372 NM) without conflict.

Table 60. Burst data content

Element	Data content	Number of bits
Beginning of burst	all zeros	15
Power stabilization		
Synchronization and ambiguity resolution	3.6.3.2.1	48
Scrambled data:	3.6.3.3	
station slot identifier (SSID)	3.6.3.3.1	3
transmission length	3.6.3.3.2	17
training sequence FEC	3.6.3.3.3	5
application data	3.6.3.3.4	up to 1 776
application FEC	3.6.3.3.5	48
fill bits (Note)	3.6.2.2	0 to 2

Note: *Data scrambling of the fill bits is optional (3.6.3.3.6).*

3.6.3.3 *SCRAMBLED DATA CONTENT*

3.6.3.3.1 *Station slot identifier (SSID).* The SSID shall be a numeric value corresponding to the letter designation A to H of the first time slot assigned to the GBAS ground subsystem, where slot A is represented by 0, B by 1, C by 2, … and H by 7. The identifier is transmitted LSB first.

3.6.3.3.2 *Transmission length*. The transmission length shall indicate the total number of bits in both application data and application FEC. The transmission length is transmitted LSB first.

3.6.3.3.3 *Training sequence FEC*. The training sequence FEC shall be computed over the SSID and transmission length fields, using a (25, 20) block code, in accordance with the following equation:

$$[P_1, ..., P_5] = [SSID_1, \ldots, SSID_3, TL_1, \ldots, TL_{17}]\ H^T$$

where

P_n = the nth bit of the training sequence FEC (P_1 shall be transmitted first);

$SSID_n$ = the nth bit of the station slot identifier ($SSID_1$ = LSB);

TL_n = the nth bit in the transmission length (TL_1 = LSB); and

H^T = the transpose of the parity matrix, defined below:

$$H^T = \begin{bmatrix} 0&0&0&0&0&0&0&1&1&1&1&1&1&1&1&1&1&1&1 \\ 0&0&1&1&1&1&1&0&0&0&0&1&1&1&1&1&1&1&1 \\ 1&1&0&0&0&1&1&1&0&0&1&1&0&0&0&0&1&1&1&1 \\ 1&1&0&1&1&0&1&1&0&1&0&1&0&0&1&1&0&0&1&1 \\ 0&1&1&0&1&0&0&1&1&1&1&0&0&1&0&1&0&1&0&1 \end{bmatrix}^T$$

Note: *This code is capable of correcting all single bit errors and detecting 75 of 300 possible double bit errors.*

3.6.3.3.4 *Application data*. The application data shall consist of one or more message blocks, as defined in 3.6.3.4. The message blocks shall be mapped directly into the application data with no additional overhead of intervening layers.

3.6.3.3.5 *Application FEC*. The application FEC shall be calculated using the application data by means of a systematic, fixed-length, Reed-Solomon (R-S) (255, 249) code.

3.6.3.3.5.1 The field-defining primitive, p(x), of the R-S code shall be:

$$p(x) = x^8 + x^7 + x^2 + x + 1$$

3.6.3.3.5.2 The generator polynomial of the R-S code, g(x), shall be:

$$g(x) = \prod_{i=120}^{125} (x - \alpha^i) = x^6 + \alpha^{176}x^5 + \alpha^{186}x^4 + \alpha^{244}x^3 + \alpha^{176}x^2 + \alpha^{156}x + \alpha^{225}$$

where α is a root of p(x) used for construction of the Galois Field of size 2^8, GF(256), and α^i is the ith primitive element in GF(256).

3.6.3.3.5.3 In generating the application FEC, the data to be encoded, m(x), shall be grouped into 8-bit R-S symbols. All data fields in the message blocks that define the application data shall be ordered such as specified in Tables 61 and 62, and in the message tables in 3.6.6. However, since the R-S code is a block code, application data blocks shorter than 249 bytes (1 992 bits) shall be extended to 249 bytes by virtual fill bits set to zero and appended to the application data. These virtual fill bits shall not be transferred to the bit scrambler. The data to be encoded, m(x), shall be defined by:

$$m(x) = a_{248}x^{248} + a_{247}x^{247} + ... + a_{248\text{-length}+1}\,x^{248\text{-length}+1} + a_{248\text{-length}}\,x^{248\text{-length}} + ... + a_1x + a_0$$

where

length represents the number of 8-bit bytes in the application data block;

a_{248} represents the message block identifier, with the rightmost bit defined as the LSB and the first bit of the application data sent to the bit scrambler;

$a_{248\text{-length}+1}$ represents the last byte of the message block CRC, with the leftmost bit defined as the MSB and the last bit of the application data sent to the bit scrambler; and

$a_{248\text{-length}}$, ..., a1, a0 are the virtual fill bits (if any).

3.6.3.3.5.4 The 6 R-S check symbols (b_i) shall be defined as the coefficients of the remainder resulting from dividing the message polynomial $x_6m(x)$ by the generator polynomial g(x):

$$b(x)=\sum_{i=0}^{5} b_i x^i + b_5x^5+b_4x^4+b_3x^3+b_2x^2+b_1x^1+b_0 = [x^6m(x)] \bmod g(x)$$

3.6.3.3.5.5 The 8-bit R-S check symbols shall be appended to the application data. Each 8-bit R-S check symbol shall be transmitted MSB first from b_0 to b_5, i.e. the first application FEC bit transferred to the bit scrambler shall be the MSB of b0 and the last application FEC bit transferred to the bit scrambler shall be the LSB of b_5.

Note 1: *This R-S code is capable of correcting up to 3 symbol errors.*

Note 2: *The order of the transmitted 8-bit R-S check symbols of the appended application FEC differs from the VHF data link (VDL) Mode 2. Moreover, for VDL Mode 2 each R-S check symbol is transmitted LSB first.*

Note 3: *Example results of application FEC encoding are given in GM on application GNSS standards and recommended practices, 7.15.*

Table 61. Format of a GBAS message block

Message block	Bits
Message block header Message CRC	48 up to 1 696 32

Table 62. Format of message block header

Data field	Bits
Message block identifier GBAS ID Message type identifier Message length	8 24 8 8

3.6.3.3.6 *Bit scrambling*

3.6.3.3.6.1 The output of a pseudo-noise scrambler with a 15-stage generator register shall be exclusive OR'ed with the burst data starting with the SSID and ending with the

application FEC. Bit scrambling of the fill bits is optional and the set value of the fill bits is optional.

Note: *The fill bits are not used by the aircraft receiver and their values have no impact on the system.*

3.6.3.3.6.2 The polynomial for the register taps of the scrambler shall be $1 + x + x^{15}$. The register content shall be rotated at the rate of one shift per bit. The initial status of the register, prior to the first SSID bit of each burst, shall be "1101 0010 1011 001", with the leftmost bit in the first stage of the register. The first output bit of the scrambler shall be sampled prior to the first register shift.

Note: *A diagram of the bit scrambler is given in GM on application GNSS standards and recommended practices, 7.4.*

3.6.3.4 *Message block format*. The message blocks shall consist of a message block header, a message and a 32-bit CRC. Table 61 shows the construction of the message block. All signed parameters shall be two's complement numbers and all unsigned parameters shall be unsigned fixed point numbers. The scaling of the data shall be as shown in the message tables in 3.6.6. All data fields in the message block shall be transmitted in the order specified in the message tables, with the LSB of each field transmitted first.

Note: *All binary representations reading left to right are MSB to LSB.*

3.6.3.4.1 *Message block header*. The message block header shall consist of a message block identifier, a GBAS identifier (ID), a message type identifier and a message length, as shown in Table 62.

Message block identifier: the 8-bit identifier for the operating mode of the GBAS message block.

Coding: 1010 1010 = normal GBAS message
1111 1111 = test GBAS message

All other values are reserved.

GBAS ID: the four-character GBAS identification to differentiate between GBAS ground subsystems.

Coding: Each character is coded using bits b1 through b_6 of its International Alphabet No. 5 (IA-5) representation. For each character, bit b_1 is transmitted first and six bits are transmitted for each character. Only upper case letters, numeric digits and IA-5 "space" are used. The rightmost character is transmitted first. For a three-character GBAS ID, the rightmost (first transmitted) character shall be IA-5 "space".

Note: *The GBAS ID is normally identical to the location indicator at the nearest airport. Assignment of GBAS IDs will be coordinated as appropriate to avoid conflicts.*

Message type identifier: the numeric label identifying the content of the message (Table 63).

Message length: the length of the message in 8-bit bytes including the 6-byte message block header, the message and the 4-byte message CRC code.

3.6.3.4.2 *Cyclic redundancy check (CRC).* The GBAS message CRC shall be calculated in accordance with 3.9.

3.6.3.4.2.1 The length of the CRC code shall be k = 32 bits.

3.6.3.4.2.2 The CRC generator polynomial shall be:

$$G(x) = x^{32} + x^{31} + x^{24} + x^{22} + x^{16} + x^{14} + x^{8} + x^{7} + x^{5} + x^{3} + x + 1$$

3.6.3.4.2.3 The CRC information field, M(x), shall be:

$$M(x) = \sum_{i=1}^{n} m_i x^{n-i} + m_1 x^{n-1} + m_2 x^{n-2} + \ldots + m_n x^0$$

3.6.3.4.2.4 M(x) shall be formed from the 48-bit GBAS message block header and all bits of the variable-length message, excluding the CRC. Bits shall be arranged in the order transmitted, such that m_1 corresponds to the first transmitted bit of the message block header, and m_n corresponds to the last transmitted bit of the (n-48) message bits.

3.6.3.4.2.5 The CRC shall be ordered such that r_1 is the first bit transmitted and r_{32} is the last bit transmitted.

3.6.4 DATA CONTENT

3.6.4.1 *Message types*. The message types that can be transmitted by GBAS shall be as in Table 63.

3.6.4.2 *TYPE 1 MESSAGE — PSEUDO-RANGE CORRECTIONS*

3.6.4.2.1 The Type 1 message shall provide the differential correction data for individual GNSS ranging sources (Table 70). The message shall contain three sections:

a) message information (time of validity, additional message flag, number of measurements and the measurement type);

b) low-frequency information (ephemeris decorrelation parameter, satellite ephemeris CRC and satellite availability information); and

c) satellite data measurement blocks.

Note: *Transmission of the low-frequency data for SBAS ranging sources is optional.*

3.6.4.2.2 Each Type 1 message shall include ephemeris decorrelation parameter, ephemeris CRC and source availability duration parameters for one satellite ranging source. The ephemeris decorrelation parameter, ephemeris CRC and source availability duration shall apply to the first ranging source in the message.

3.6.4.2.3 Pseudo-range correction parameters shall be as follows:

Modified Z-count: the indication of the time of applicability for all the parameters in the message.

Coding: the modified Z-count resets on the hour (xx:00), 20 minutes past the hour (xx:20) and 40 minutes past the hour (xx:40) referenced to GPS time.

Additional message flag: an identification of whether the set of measurement blocks in a single frame for a particular measurement type is contained in a single Type 1 message or a linked pair of messages.

Coding: 0 = All measurement blocks for a particular measurement type are contained in one Type 1 message.
1 = This is the first transmitted message of a linked pair of Type 1 messages that together contain the set of all measurement blocks for a particular measurement type.
2 = Spare
3 = This is the second transmitted message of a linked pair of Type 1 messages that together contain the set of all measurement blocks for a particular measurement type.

Note: *When a linked pair of Type 1 messages is used for a particular measurement type, the number of measurements and low-frequency data are computed separately for each of the two individual messages. Number of measurements: the number of measurement blocks in the message.*

Measurement type: the type of ranging signal from which the corrections have been computed.

Table 63. GBAS VHF data broadcast messages

Message type identifier	Message name
0	Spare
1	Pseudo-range corrections
2	GBAS-related data
3	Null message
4	Final approach segment (FAS) data
5	Predicted ranging source availability
6	Reserved
7	Reserved for national applications
8	Reserved for test applications
9 to 100	Spare
101	GRAS pseudo-range corrections
102 to 255	Spare

Note: *See 3.6.6 for message formats.*

Coding: 0 = C/A or CSA code L1
1 = reserved
2 = reserved
3 = reserved
4 to 7 = spare

Ephemeris decorrelation parameter (P): a parameter that characterizes the impact of residual ephemeris errors due to decorrelation for the first measurement block in the message.

For a SBAS geostationary satellite, the ephemeris decorrelation parameter, if transmitted, shall be coded as all zeros.

For GBAS ground subsystems that do not broadcast the additional data block 1 in the Type 2 message, the ephemeris decorrelation parameter shall be coded as all zeros.

Ephemeris CRC: the CRC computed with the ephemeris data used to determine corrections for the first measurement block in the message. The ephemeris CRC for core satellite constellation(s) ranging sources shall be calculated in accordance with 3.9. The length of the CRC code shall be k = 16 bits. The CRC generator polynomial shall be:

$$G(x) = x^{16} + x^{12} + x^5 + 1$$

The CRC information field, M(x), for a given satellite shall be:

$$M(x) = \sum_{i=1}^{n} m_i x^{n-1} + m_1 x^{n-1} + m_2 x^{n-2} + \ldots + m_n x^0$$

For a GPS satellite, M(x) shall be of length n = 576 bits. M(x) for a GPS satellite shall be calculated using the first 24 bits from each of words 3 to S10 of subframes 1, 2 and 3 of the data transmission from that satellite, ANDed with the GPS satellite ephemeris mask of Table 64. M(x) shall be arranged in the order that bytes are transmitted by the GPS satellite, but with each byte ordered LSB first, such that m1 corresponds to bit 68 of subframe 1, and m_{576} corresponds to bit 287 of subframe 3.

Note: *M(x) for a GPS satellite does not include word 1 (TLM) or word 2 (HOW), which start each subframe, or the 6 parity bits at the end of each word.*

For a GLONASS satellite, M(x) shall be of length n = 340 bits. M(x) for a GLONASS satellite shall be calculated using strings 1, 2, 3 and 4 of the data transmission from that satellite, ANDed with the GLONASS satellite ephemeris mask of Table 65. Bits shall be arranged in transmission order such that m1 corresponds to bit 85 of string 1, and m_{340} corresponds to bit 1 of string 4.

For a SBAS geostationary satellite, the ephemeris CRC, if transmitted shall be coded as all zeros.

The CRC shall be transmitted in the order r_9, r_{10}, r_{11}...., r_{16}, r_1, r_2, r_3...r_8, where ri is the ith coefficient of the remainder R(x) as defined in 3.9**.**

Source availability duration: the predicted duration for which corrections for the ranging source are expected to remain available, relative to the modified Z-count for the first measurement block.

Coding: 1111 1110 = The duration is greater than or equal to 2 540 seconds. 1111 1111 = Prediction of source availability duration is not provided by this ground subsystem.

3.6.4.2.4 The measurement block parameters shall be as follows:

Ranging source ID: the identity of the ranging source to which subsequent measurement block data are applicable.

Table 64. GPS satellite ephemeris mask

Subframe 1:	Byte 1	Byte 2	Byte 3		Byte 1	Byte 2	Byte 3
Word 3	0000 0000	0000 0000	0000 0011	Word 4	0000 0000	0000 0000	0000 0000
Word 5	0000 0000	0000 0000	0000 0000	Word 6	0000 0000	0000 0000	0000 0000
Word 7	0000 0000	0000 0000	1111 1111	Word 8	1111 1111	1111 1111	1111 1111
Word 9	1111 1111	1111 1111	1111 1111	Word 10	1111 1111	1111 1111	1111 1100
Subframe 2:	**Byte 1**	**Byte 2**	**Byte 3**		**Byte 1**	**Byte 2**	**Byte 3**
Word 3	1111 1111	1111 1111	1111 1111	Word 4	1111 1111	1111 1111	1111 1111
Word 5	1111 1111	1111 1111	1111 1111	Word 6	1111 1111	1111 1111	1111 1111
Word 7	1111 1111	1111 1111	1111 1111	Word 8	1111 1111	1111 1111	1111 1111
Word 9	1111 1111	1111 1111	1111 1111	Word 10	1111 1111	1111 1111	0000 0000
Subframe 3:	**Byte 1**	**Byte 2**	**Byte 3**		**Byte 1**	**Byte 2**	**Byte 3**
Word 3	1111 1111	1111 1111	1111 1111	Word 4	1111 1111	1111 1111	1111 1111
Word 5	1111 1111	1111 1111	1111 1111	Word 6	1111 1111	1111 1111	1111 1111
Word 7	1111 1111	1111 1111	1111 1111	Word 8	1111 1111	1111 1111	1111 1111
Word 9	1111 1111	1111 1111	1111 1111	Word 10	1111 1111	1111 1111	1111 1100

Table 65. GLONASS satellite ephemeris mask

String 1:
0 0000 0000 0000 0000 0000 1111 1111 1111 1111 1111 1111 1111
1111 1111 1111 1111 1111 1111 1111 0000 0000

String 2:
0 0000 0000 0000 0000 0000 1111 1111 1111 1111 1111 1111 1111
1111 1111 1111 1111 1111 1111 1111 0000 0000

String 3:
0 0000 0111 1111 1111 0000 1111 1111 1111 1111 1111 1111 1111
1111 1111 1111 1111 1111 1111 1111 0000 0000

String 4:
0 0000 1111 1111 1111 1111 1111 1100 0000 0000 0000 0000 0000
0000 0000 0000 0000 0000 0000 0000 0000 0000

Coding: 1 to 36 = GPS satellite IDs (PRN)
37 = reserved
38 to 61 = GLONASS satellite IDs (slot number plus 37)
62 to 119 = spare
120 to 138 = SBAS satellite IDs (PRN)
139 to 255 = spare

Issue of data (IOD): The issue of data associated with the ephemeris data used to determine pseudo-range and range rate corrections.

Coding: for GPS, IOD = GPS IODE parameter (3.1.1.3.2.2) for GLONASS, IOD = GLONASS "t_b" parameter (see 3.2.1.3.1) for SBAS, IOD = 1111 1111

Note: *For GLONASS insert 0 in the MSB of the IOD.*

Pseudo-range correction (PRC): the correction to the ranging source pseudo-range.

Range rate correction (RRC): the rate of change of the pseudo-range correction.

σ_{pr_gnd}: the standard deviation of a normal distribution associated with the signal-in-space contribution of the pseudo-range error at the GBAS reference point (3.6.5.5.1, 3.6.5.5.2 and 3.6.7.2.2.4).

Coding: 1111 1111 = Ranging source correction invalid.

B_1 through B_4: are the integrity parameters associated with the pseudo-range corrections provided in the same measurement block. For the ith ranging source these parameters correspond to $B_{i,1}$ through $B_{i,4}$ (3.6.5.5.1.2, 3.6.5.5.2.2 and 3.6.7.2.2.4).

The indices "1-4" correspond to the same physical reference receiver for every frame transmitted from a given ground subsystem during continuous operation.

Coding: 1000 0000 = Reference receiver was not used to compute the pseudo-range correction.

Note: *Some airborne receivers may expect a static correspondence of the reference receivers to the indices for short service interruptions. However, the B-value indices may be reassigned after the ground subsystem has been out of service for an extended period of time, such as for maintenance.*

3.6.4.3 *Type 2 message — GBAS-related data.* Type 2 message shall identify the location of the GBAS reference point at which the corrections provided by the GBAS apply and shall give other GBAS-related data (Table 71). GBAS-related data parameters shall be as follows:

Note: *Additional data blocks may be included in the Type 2 message. Additional data block 1 and additional data block 2 are defined. In the future, other additional data blocks may be defined. Data blocks 2 through 255 are variable length and may be appended to the message after additional data block 1 in any order.*

GBAS reference receivers: the number of GNSS reference receivers installed in this GBAS ground subsystem.

Coding: 0 = GBAS installed with 2 reference receivers
1 = GBAS installed with 3 reference receivers
2 = GBAS installed with 4 reference receivers
3 = The number of GNSS reference receivers installed in this GBAS ground subsystem is not applicable

Ground accuracy designator letter: the letter designator indicating the minimum signal-in-space accuracy performance provided by GBAS (3.6.7.1.1).

Coding: 0 = accuracy designation A
1 = accuracy designation B

2 = accuracy designation C
3 = spare

GBAS continuity/integrity designator (GCID): numeric designator indicating the operational status of the GBAS.

Coding: 0 = spare
1 = GCID 1
2 = GCID 2
3 = GCID 3
4 = GCID 4
5 = spare
6 = spare
7 = unhealthy

Note 1: *The values of GCID 2, 3 and 4 are specified in order to ensure compatibility of equipment with future GBAS.*

Note 2: *The value of GCID 7 indicates that a precision approach or APV cannot be initiated.*

Local magnetic variation: the published magnetic variation at the GBAS reference point.

Coding: Positive value denotes east variation (clockwise from true north), Negative value denotes west variation (counterclockwise from true north) 100 0000 0000 = Precision approach procedures supported by this GBAS are published based on true bearing.

Note: *Local magnetic variation is chosen to be consistent with procedure design and is updated during magnetic epoch years.*

$\sigma_{vert_iono_gradient}$: the standard deviation of a normal distribution associated with the residual ionospheric uncertainty due to spatial decorrelation (3.6.5.4).

Refractivity index (N_r): the nominal tropospheric refractivity index used to calibrate the tropospheric correction associated with the GBAS ground subsystem (3.6.5.3).

Coding: This field is coded as two's complement number with an offset of +400. A value of zero in this field indicates a refractivity index of 400.

Scale height (h_0): a scale factor used to calibrate the tropospheric correction and residual tropospheric uncertainty associated with the GBAS ground subsystem (3.6.5.3).

Refractivity uncertainty (σ_n): the standard deviation of a normal distribution associated with the residual tropospheric uncertainty (3.6.5.3).

Latitude: the latitude of the GBAS reference point defined in arc seconds.

Coding: Positive value denotes north latitude.

Negative value denotes south latitude.

Longitude: the longitude of the GBAS reference point defined in arc seconds.

Coding: Positive value denotes east longitude.
Negative value denotes west longitude.

Reference point height: the height of the GBAS reference point above the WGS-84 ellipsoid.

3.6.4.3.1 *Additional data block 1 parameters*. Additional data block 1 parameters shall be as follows:

REFERENCE STATION DATA SELECTOR (RSDS): the numerical identifier that is used to select the GBAS ground subsystem.

Note: *The RSDS is different from every other RSDS and every reference path data selector (RPDS) broadcast on the same frequency by every GBAS ground subsystem within the broadcast region.*

Coding: 1111 1111 = GBAS positioning service is not provided

MAXIMUM USE DISTANCE (D_{max}): the maximum distance (slant range) from the GBAS reference point for which the integrity is assured.

Note: *This parameter does not indicate a distance within which VHF data broadcast field strength requirements are met.*

Coding: 0 = No distance limitation

GPS EPHEMERIS MISSED DETECTION PARAMETER, GBAS Positioning Service ($K_{md_e_POS,GPS}$): the multiplier for computation of the ephemeris error position bound for the GBAS positioning service derived from the probability of missed detection given that there is an ephemeris error in a GPS satellite.

For GBAS ground subsystems that do not broadcast corrections for GPS ranging sources or that do not provide the GBAS positioning service, this parameter shall be coded as all zeros.

GPS EPHEMERIS MISSED DETECTION PARAMETER, Category I Precision Approach and APV ($K_{md_e,GPS}$): the multiplier for computation of the ephemeris error position bound for Category I precision approach and APV derived from the probability of missed detection given that there is an ephemeris error in a GPS satellite.

For GBAS ground subsystems that do not broadcast corrections for GPS ranging sources, this parameter shall be coded as all zeros.

GLONASS EPHEMERIS MISSED DETECTION PARAMETER, GBAS Positioning Service ($K_{md_e,_POS,GLONASS}$): the multiplier for computation of the ephemeris error position bound for the GBAS positioning service derived from the probability of missed detection given that there is an ephemeris error in a GLONASS satellite.

For GBAS ground subsystems that do not broadcast corrections for GLONASS ranging sources or that do not provide positioning service, this parameter shall be coded as all zeros.

GLONASS EPHEMERIS MISSED DETECTION PARAMETER, Category I Precision Approach and APV ($K_{md_e_,GLONASS}$): the multiplier for computation of the

ephemeris error position bound for Category I precision approach and APV derived from

the probability of missed detection given that there is an ephemeris error in a GLONASS satellite.

For GBAS ground subsystems that do not broadcast corrections for GLONASS ranging sources, this parameter shall be coded as all zeros.

3.6.4.3.2 *Additional data blocks*. For additional data blocks other than additional data block 1, the parameters for each data block shall be as follows:

ADDITIONAL DATA BLOCK LENGTH: the number of bytes in the additional data block, including the additional data block length and additional data block number fields.

ADDITIONAL DATA BLOCK NUMBER: the numerical identifier of the type of additional data block.

Coding:

0 to 1 = reserved
2 = additional data block 2, GRAS broadcast stations
3 = reserved for future services supporting Category II/III operations
4 = additional data block 4, VDB authentication parameters
5 to 255 = spare

ADDITIONAL DATA PARAMETERS: the set of data defined in accordance with the additional data block number.

3.6.4.3.2.1 *GRAS broadcast stations*

Parameters for additional data block 2 shall include data for one or more broadcast stations as follows (Table 65A):

CHANNEL NUMBER: the channel number, as defined in 3.6.5.7, associated with a GBAS broadcast station.

Note: *The channel number in this field refers to a frequency and an RSDS.*

∆*LATITUDE*: the difference of latitude of a GBAS broadcast station, measured from the latitude provided in the latitude parameter of Type 2 message.

Coding: Positive value denotes that the GBAS broadcast station is north of the GBAS reference point. Negative value denotes that the GBAS broadcast station is south of the GBAS reference point.

∆*LONGITUDE*: the difference of longitude of a GBAS broadcast station, measured from the longitude provided in the longitude parameter of Type 2 message.

Coding: Positive value denotes that the GBAS broadcast station is east of the GBAS reference point.

Negative value denotes that the GBAS broadcast station is west of the GBAS reference point.

Note: *Guidance material concerning additional data block 2 is provided in GM on application GNSS standards and recommended practices, 7.17.*

3.6.4.3.2.2 *VDB authentication parameters*

Additional data block 4 includes information needed to support VDB authentication protocols (Table 65B).

Slot group definition: This 8-bit field indicates which of the 8 slots (A-H) are assigned for use by the ground station. The field is transmitted LSB first. The LSB corresponds to slot A, the next bit to slot B, and so on. A “1” in the bit position indicates the slot is assigned to the ground station. A “0” indicates the slot is not assigned to the ground station.

Table 65A. GRAS broadcast station data

Data content	Bits used	Range of values	Resolution
Channel number	16	20001 to 39999	1
ΔLatitude	8	±25.4°	0.2°
ΔLongitude	8	±25.4°	0.2°

Table 65B. VDB authentication parameters

Data content	Bits used	Range of values	Resolution
Slot group definition	8	—	—

3.6.4.4 *TYPE 3 MESSAGE — NULL MESSAGE*

3.6.4.4.1 The Type 3 message is a variable length “null message” which is intended to be used by ground subsystems that support the authentication protocols (see section 3.6.7.4).

3.6.4.4.2 The parameters for the Type 3 message shall be as follows:

Filler: a sequence of bits alternating between “1” and “0” with a length in bytes that is 10 less than the value in the message length field in the message header.

3.6.4.5 *Type 4 message — Final approach segment (FAS).* Type 4 message shall contain one or more sets of FAS data, each defining a single precision approach (Table 72). Each Type 4 message data set shall include the following:

Data set length: the number of bytes in the data set. The data set includes the data set length field and the associated FAS data block, FAS vertical alert limit (FASVAL)/approach status and FAS lateral alert limit (FASLAL)/approach status fields.

FAS data block: the set of parameters to identify a single precision approach or APV and define its associated approach path.

Coding: See 3.6.4.5.1 and Table 66.

Note: *Guidance material for FAS path definition is contained in GM on application GNSS standards and recommended practices, 7.11.*

FASVAL/approach status: the value of the parameter FASVAL as used in 3.6.5.6.

Coding: 1111 1111 = Do not use vertical deviations.

Note: *The range and resolution of values for FASVAL depend upon the approach performance designator in the associated FAS data block.*

FASLAL/approach status: the value of the parameter FASLAL as used in 3.6.5.6.

Coding: 1111 1111 = Do not use approach.

3.6.4.5.1 *FAS data block.* The FAS data block shall contain the parameters that define a single precision approach or APV. The FAS path is a line in space defined by the landing threshold point/fictitious threshold point (LTP/FTP), flight path alignment point (FPAP), threshold crossing height (TCH) and glide path angle (GPA). The local level plane for the approach is a plane perpendicular to the local vertical passing through the LTP/FTP (i.e. tangent to the ellipsoid at the LTP/FTP). Local vertical for the approach is normal to the WGS-84 ellipsoid at the LTP/FTP. The glide path intercept point (GPIP) is where the final approach path intercepts the local level plane. FAS data block parameters shall be as follows:

Operation type: straight-in approach procedure or other operation types.

Coding: 0 = straight-in approach procedure
1 to 15 = spare

Table 66. Final approach segment (FAS) data block

Data content	Bits used	Range of values	Resolution
Operation type	4	0 to 15	1
SBAS provider ID	4	0 to 15	1
Airport ID	32	—	—
Runway number	6	1 to 36	1
Runway letter	2	—	—
Approach performance designator	3	0 to 7	1
Route indicator	5	—	—
Reference path data selector	8	0 to 48	1
Reference path identifier	32	—	—
LTP/FTP latitude	32	±90.0°	0.0005 arcsec
LTP/FTP longitude	32	±180.0°	0.0005 arcsec
LTP/FTP height	16	–512.0 to 6 041.5 m	0.1 m
ΔFPAP latitude	24	±1.0°	0.0005 arcsec
ΔFPAP longitude	24	±1.0°	0.0005 arcsec
Approach TCH (Note)	15	0 to 1 638.35 m or 0 to 3 276.7 ft	0.05 m or 0.1 ft
Approach TCH units selector	1	—	—
GPA	16	0 to 90.0°	0.01°
Course width	8	80 to 143.75 m	0.25 m
ΔLength offset	8	0 to 2 032 m	8 m
Final approach segment CRC	32	—	—

Note: *Information can be provided in either feet or metres as indicated by the approach TCH unit selector.*

SBAS service provider ID: indicates the service provider associated with this FAS data block.

Coding: See Table 27.
14 = FAS data block is to be used with GBAS only.
15 = FAS data block can be used with any SBAS service provider.

Note: *This parameter is not used for approaches conducted using GBAS or GRAS pseudo-range corrections.*

Airport ID: the three- or four-letter designator used to designate an airport.

Coding: Each character is coded using the lower 6 bits of its IA-5 representation. For each character, b_i is transmitted first, and 2 zero bits are appended after b_6, so that 8 bits are transmitted for each character. Only upper case letters, numeric digits and IA-5 “space” are used. The rightmost character is transmitted first. For a three-character airport ID, the rightmost (first transmitted) character shall be IA-5 “space”.

Runway number: the approach runway number.

Coding: 1 to 36 = runway number

Note: *For heliport and point-in-space operations, the runway number value is the integer nearest to one tenth of the final approach course, except when that integer is zero, in which case the runway number is 36.*

Runway letter: the one-letter designator used, as necessary, to differentiate between parallel runways.

Coding: 0 = no letter
1 = R (right)
2 = C (centre)
3 = L (left)

Approach performance designator: the general information about the approach design.

Coding: 0 = APV
1 = Category I
2 = reserved for Category II
3 = reserved for Category III
4 to 7 = spare

Note: *Some airborne equipment designed for Category I performance is insensitive to the value of the APD. It is intended that airborne equipment designed for Category I performance accepts APD values of at least 1-4 as valid to accommodate future extensions to higher performance types using the same FAS data block.*

Route indicator: the one-letter identifier used to differentiate between multiple approaches to the same runway end.

Coding: The letter is coded using bits b1 through b_5 of its IA-5 representation. Bit b1 is transmitted first. Only upper case letters, excluding “I” and “O”, or IA-5 “space” are used.

Reference path data selector (RPDS): the numeric identifier that is used to select the FAS data block (desired approach).

Note: *The RPDS for a given FAS data block is different from every other RPDS and every reference station data selector (RSDS) broadcast on the same frequency by every GBAS within the broadcast region.*

Reference path identifier (RPI): the three or four alphanumeric characters used to uniquely designate the reference path.

Coding: Each character is coded using bits b1 through b_6 of its IA-5 representation. For each character, b_1 is transmitted first, and 2 zero bits are appended after b_6 so that 8 bits are transmitted for each character. Only upper case letters, numeric digits and IA-5 “space” are used. The rightmost character is transmitted first. For a three-character reference path identifier, the rightmost (first transmitted) character shall be IA-5 “space”.

Note: *The LTP/FTP is a point over which the FAS path passes at a relative height specified by the TCH. LTP is normally located at the intersection of the runway centreline and the threshold.*

LTP/FTP latitude: the latitude of the LTP/FTP point in arc seconds.

Coding: Positive value denotes north latitude.

Negative value denotes south latitude.

LTP/FTP longitude: the longitude of the LTP/FTP point in arc seconds.

Coding: Positive value denotes east longitude.

Negative value denotes west longitude.

LTP/FTP height: the height of the LTP/FTP above the WGS-84 ellipsoid.

Coding: This field is coded as an unsigned fixed-point number with an offset of –512 metres. A value of zero in this field places the LTP/FTP 512 metres below the earth ellipsoid.

Note: *The FPAP is a point at the same height as the LTP/FTP that is used to define the alignment of the approach. The origin of angular deviations in the lateral direction is defined to be 305 metres (1 000 ft) beyond the FPAP along the lateral*

FAS path. For an approach aligned with the runway, the FPAP is at or beyond the stop end of the runway.

∆*FPAP latitude:* the difference of latitude of the runway FPAP from the LTP/FTP in arc seconds.

Coding: Positive value denotes the FPAP latitude north of LTP/FTP latitude. Negative value denotes the FPAP latitude south of the LTP/FTP latitude.

∆*FPAP longitude:* the difference of longitude of the runway FPAP from the LTP/FTP in arc seconds.

Coding: Positive value indicates the FPAP longitude east of LTP/FTP longitude. Negative value indicates the FPAP longitude west of LTP/FTP longitude.

Approach TCH: the height of the FAS path above the LTP/FTP defined in either feet or metres as indicated by the TCH units selector.

Approach TCH units selector: the units used to describe the TCH.

Coding: 0 = feet
1 = metres

Glide path angle (GPA): the angle of the FAS path with respect to the horizontal plane tangent to the WGS-84 ellipsoid at the LTP/FTP.

Course width: the lateral displacement from the path defined by the FAS at the LTP/FTP at which full-scale deflection of a course deviation indicator is attained.

Coding: This field is coded as an unsigned fixed-point number with an offset of 80 metres. A value of zero in this field indicates a course width of 80 metres at the LTP/FTP.

ΔLength offset: the distance from the stop end of the runway to the FPAP.

Coding: 1111 1111 = not provided

Final approach segment CRC: the 32-bit CRC appended to the end of each FAS data block in order to ensure approach data integrity. The 32-bit final approach segment CRC shall be calculated in accordance with 3.9. The length of the CRC code shall be k = 32 bits.

The CRC generator polynomial shall be:

$$G(x) = x^{32} + x^{31} + x^{24} + x^{22} + x^{16} + x^{14} + x^{8} + x^{7} + x^{5} + x^{3} + x + 1$$

The CRC information field, M(x), shall be:

$$M(x) = \sum_{i=1}^{272} m_i \, x^{272-i} = m_1 x^{271} + m_2 x^{270} + \ldots + m_{272} x^{0}$$

M(x) shall be formed from all bits of the associated FAS data block, excluding the CRC. Bits shall be arranged in the order transmitted, such that m_1 corresponds to the LSB of the operation type field, and m_{272} corresponds to the MSB of the Δlength offset field. The CRC shall be ordered such that r_1 is the LSB and r_{32} is the MSB.

3.6.4.6 *Type 5 message — predicted ranging source availability.* When used, the Type 5 message shall contain rising and setting information for the currently visible or soon to be visible ranging sources. Predicted ranging source availability parameters shall be as follows:

Modified Z-count: indicates the time of applicability of the parameters in this message.

Coding: Same as modified Z-count field in Type 1 message (3.6.4.2).

Number of impacted sources: the number of sources for which duration information applicable to all approaches is provided.

Coding: 0 = Only specified obstructed approaches have limitations.
1 to 31 = The number of ranging sources impacted.

Ranging source ID: as for Type 1 message (3.6.4.2).

Source availability sense: indicates whether the ranging source will become available or cease to be available.

Coding: 0 = Differential corrections will soon cease to be provided for the associated ranging source.

1 = Differential corrections will soon start to be provided for the associated ranging source.

Source availability duration: the predicted minimum ranging source availability duration relative to the modified Z-count.

Coding: 111 1111 = The duration is greater than or equal to 1 270 seconds.

Number of obstructed approaches: the number of approaches for which the corrections will be reduced due to approach unique constellation masking.

Reference path data selector: an indication of the FAS data block to which the source availability data applies (3.6.4.5.1).

Number of impacted sources for this approach: the number of sources for which duration information applicable only to this approach is provided.

3.6.4.7 *TYPE 6 MESSAGE*

Note: *Type 6 message is reserved for future use to provide the information required for Category II/III precision approaches.*

3.6.4.8 *TYPE 7 MESSAGE*

Note: *Type 7 message is reserved for national applications.*

3.6.4.9 *TYPE 8 MESSAGE*

Note: *Type 8 message is reserved for local and regional test applications.*

3.6.4.10 TYPE 101 MESSAGE — GRAS PSEUDO-RANGE CORRECTIONS

3.6.4.10.1 The Type 101 message shall provide the differential correction data for individual GNSS ranging sources (Table 70A). The message shall contain three sections:

a) message information (time of validity, additional message flag, number of measurements and the measurement type);

b) low-frequency information (ephemeris decorrelation parameter, satellite ephemeris CRC and satellite availability information); and

c) satellite data measurement blocks.

3.6.4.10.2 Each Type 101 message shall include ephemeris decorrelation parameter, ephemeris CRC and source availability duration parameters for one satellite ranging source. The ephemeris decorrelation parameter, ephemeris CRC and source availability duration shall apply to the first ranging source in the message.

3.6.4.10.3 Pseudo-range correction parameters shall be as follows:

Modified Z-count: as defined in 3.6.4.2.3.

Additional message flag: as defined in 3.6.4.2.3 except applicable to Type 101 messages.

Number of measurements: as defined in 3.6.4.2.3.

Measurement type: as defined in 3.6.4.2.3.

Ephemeris decorrelation parameter (P): as defined in 3.6.4.2.3.

Ephemeris CRC: as defined in 3.6.4.2.3.

Source availability duration: as defined in 3.6.4.2.3.

Number of B parameters: an indication of whether the B parameters are included in the measurement block for each ranging source.

Coding: 0 = B parameters are not included
1 = 4 B parameters per measurement block

3.6.4.10.4 The measurement block parameters shall be as follows:

Ranging source ID: as defined in 3.6.4.2.4.

Issue of data (IOD): as defined in 3.6.4.2.4.

Pseudo-range correction (PRC): as defined in 3.6.4.2.4.

Range rate correction (RRC): as defined in 3.6.4.2.4.

σ_{pr_gnd}: as defined in 3.6.4.2.4, with the exception of the range of values and resolution.

B1 through B4: as defined in 3.6.4.2.4.

Note: *Inclusion of the B parameters in the measurement block is optional for Type 101 messages.*

3.6.5 DEFINITIONS OF PROTOCOLS FOR DATA APPLICATION

Note: *This section defines the inter-relationships of the data broadcast message parameters. It provides definitions of parameters that are not transmitted, but are used by either or both non-aircraft and aircraft elements, and that define terms applied to determine the navigation solution and its integrity.*

3.6.5.1 *Measured and carrier smoothed pseudo-range.* The broadcast correction is applicable to carrier smoothed code pseudo-range measurements that have not had the satellite broadcast troposphere and ionosphere corrections applied to them.

The carrier smoothing is defined by the following filter:

$$P_{CSCn} = \alpha P + (1 - \alpha)\left(P_{CSC_{n-1}} + \frac{\lambda}{2\pi}(\phi_n - \phi_{n-1})\right)$$

where

P_{CSCn} = the smoothed pseudo-range;

P_{CSCn-1} = the previous smoothed pseudo-range;

P = the raw pseudo-range measurement where the raw pseudo-range measurements are obtained from a carrier driven code loop, first order or higher and with a one-sided noise bandwidth greater than or equal to 0.125 Hz;

λ = the L1 wavelength;

φ_n = the carrier phase;

φ_{n-1} = the previous carrier phase; and

α = the filter weighting function equal to the sample interval divided by the time constant of 100 seconds, except as specified in 3.6.8.3.5.1 for airborne equipment.

3.6.5.2 *Corrected pseudo-range.* The corrected pseudo-range for a given satellite at time *t* is:

$$\mathbf{PR_{corrected} = P_{CSC} + PRC + RRC \times (t - tz\text{-}count) + TC + c \times (\Delta t_{sv})_{L1}}$$

where

P_{CSC} = the smoothed pseudo-range (defined in 3.6.5.1);

PRC = the pseudo-range correction (defined in 3.6.4.2);

RRC = the pseudo-range correction rate (defined in 3.6.4.2);

t = the current time;

tz-count = the time of applicability derived from the modified Z-count (defined in 3.6.4.2);

TC = the tropospheric correction (defined in 3.6.5.3); and

c and $(\Delta t_{sv})_{L1}$ are as defined in 3.1.2.2 for GPS satellites.

3.6.5.3 *TROPOSPHERIC DELAY*

3.6.5.3.1 The tropospheric correction for a given satellite is:

$$TC = N_r h_0 \frac{10^{-6}}{\sqrt{0.002 + \sin^2(El_i)}} (1 - e^{-\Delta h / h_0})$$

where

N_r = refractivity index from the Type 2 message (3.6.4.3);

Δh = height of the aircraft above the GBAS reference point;

El_i = elevation angle of the ith satellite; and

h_0 = troposphere scale height from the Type 2 message.

3.6.5.3.2 The residual tropospheric uncertainty is:

$$\sigma_{tropo} = \sigma_n h_0 \frac{10^{-6}}{\sqrt{0.002 + \sin^2(El_i)}} (1 - e^{-\Delta h / h_0})$$

where σ_n = the refractivity uncertainty from the Type 2 message (3.6.4.3).

3.6.5.4 *Residual ionospheric uncertainty.* The residual ionospheric uncertainty for a given satellite is:

$$\sigma_{iono} = F_{pp} \times \sigma_{vert_iono_gradient} \times (x_{air} + 2 \times \tau \times v_{air})$$

where

F_{pp} = the vertical-to-slant obliquity factor for a given satellite (3.5.5.5.2);

$\sigma_{vert_iono_gradient}$ = (as defined in 3.6.4.3);

x_{air} = the distance (slant range) in metres between current aircraft location and the GBAS reference point indicated in the Type 2 message;

τ = 100 seconds (time constant used in 3.6.5.1); and

vair = the aircraft horizontal approach velocity (metres per second).

3.6.5.5 *PROTECTION LEVELS*

3.6.5.5.1 *Category I precision approach and APV.* The signal-in-space vertical and lateral protection levels (VPL and LPL) are upper confidence bounds on the error in the position relative to the GBAS reference point defined as:

$VPL = MAX\{VPL_{HO}, VPL_{H1}\}$

$LPL = MAX\{LPL_{HO}, LPL_{H1}\}$

3.6.5.5.1.1 *Normal measurement conditions*

3.6.5.5.1.1.1 The vertical protection level (VPL_{H0}) and lateral protection level (LPL_{H0}), assuming that normal measurement conditions (i.e. no faults) exist in all reference receivers and on all ranging sources, is calculated as:

$$VPL_{H0} = K_{ffmd} \sqrt{\sum_{i=1}^{N} s_vert_i^2 \times \sigma_i^2}$$

$$LPL_{H0} = K_{ffmd} \sqrt{\sum_{i=1}^{N} s_lat_i^2 \times \sigma_i^2}$$

where

K_{ffmd} = the multiplier derived from the probability of fault-free missed detection;

s_vert_i = $s_{v,i} + s_{x,i} \times \tan(GPA)$;

s_lat_i = $s_{y,i}$;

$s_{x,i}$ = the partial derivative of position error in the x-direction with respect to pseudo-range error on the ith satellite;

$s_{y,i}$ = the partial derivative of position error in the y-direction with respect to pseudo-range error on the ith satellite;

$s_{v,i}$ = the partial derivative of position error in the vertical direction with respect to pseudo-range error on the ith satellite;

GPA = the glidepath angle for the final approach path (3.6.4.5.1);

N = the number of ranging sources used in the position solution; and

i = the ranging source index for ranging sources used in the position solution.

Note: *The coordinate reference frame is defined such that x is along track positive forward, y is crosstrack positive left in the local level tangent plane and v is the positive up and orthogonal to x and y.*

3.6.5.5.1.1.2 For a general-least-squares position solution, the projection matrix S is defined as:

$$S \equiv \begin{bmatrix} S_{x,1} & S_{x,2} & \cdots & S_{x,N} \\ S_{y,1} & S_{y,2} & \cdots & S_{y,N} \\ S_{v,1} & S_{v,2} & \cdots & S_{v,N} \\ S_{t,1} & S_{t,2} & \cdots & S_{t,N} \end{bmatrix} = (G^T \times W \times G)^{-1} \times G^T \times W$$

where

G_i = [–cos El_i cos Az_i –cos El_i sin Az_i –sin El_i 1] = i^{th} row of G; and

$$W = \begin{bmatrix} \sigma_1^2 & 0 & \cdots & 0 \\ 0 & \sigma_2^2 & \cdots & 0 \\ \vdots & \vdots & \ddots & \vdots \\ 0 & 0 & \cdots & \sigma_N^2 \end{bmatrix}^{-1}$$

where $\sigma^2_i = \sigma^2_{pr_gnd,i} + \sigma^2_{tropo,i} + \sigma^2_{pr_air,i} + \sigma^2_{iono,i}$;

where

$\sigma_{pr_gnd,i}$ = σ_{pr_gnd} for the ith ranging source (3.6.4.2);

$\sigma_{tropo,i}$ = the residual tropospheric uncertainty for the ith ranging source (3.6.5.3);

= the residual ionospheric delay (due to spatial decorrelation) uncertainty for the i_{th} ranging source (3.6.5.4); and

$\sigma_{pr_air,i}$ = $\sqrt{\sigma^2_{receiver}(El_i) + \sigma^2_{multipath}(El_i)}$ the standard deviation of the aircraft contribution to the corrected pseudo-range error for the i_{th} ranging source. The total aircraft contribution includes the receiver contribution (3.6.8.2.1) and a standard allowance for airframe multipath;

where

$\sigma_{multipath}(El_i) = 0.13 + 0.53e^{-El_i/10\ deg}$, the standard model for the contribution of airframe multipath (in metres);

El_i = the elevation angle for the ith ranging source (in degrees); and

Az_i = the azimuth for the ith ranging source taken counterclockwise for the x axis (in degrees).

Note: *To improve readability, the subscript i was omitted from the projection matrix's equation.*

3.6.5.5.1.2 *Faulted measurement conditions.* When the Type 101 message is broadcast without B parameter blocks, the values for VPL_{H1} and LPL_{H1} are defined as zero. Otherwise, the vertical protection level (VPL_{H1}) and lateral protection level (LPL_{H1}), assuming that a latent fault exists in one, and only one reference receiver, are:

$$\mathbf{VPL_{H1} = max\ [VPL_j]}$$

$$\mathbf{LPL_{H1} = max\ [LPL_j]}$$

where VPL_j and LPL_j for j = 1 to 4 are

$VPL_j = |B_vert_j| + K_{md}\ \sigma_{vert,H1}$ and

$LPL_j = |B_lat_j| + K_{md}\ \sigma_{lat,H1}$

and

$B_vert_j = \sum_{i=1}^{N}(s_vert_i \times B_{i,j})$;

$B_lat_j = \sum_{i=1}^{N}(s_lat_i \times B_{i,j})$;

$B_{i,j}$ = the broadcast differences between the broadcast pseudo-range corrections and the corrections obtained excluding the jth reference receiver measurement for the ith ranging source;

K_{md} = the multiplier derived from the probability of missed detection given that the ground subsystem is faulted;

$\sigma^2_{vert,H1} = \sum_{i=1}^{N}(s_vert_i^2 \times \sigma_H1_i^2)$;

$\sigma^2_{lat,H1} = \sum_{i=1}^{N}(s_lat_i^2 \times \sigma_H1_i^2)$;

$\sigma_H1^2_i = \left(\frac{M_i}{U_i}\right)\sigma^2_{pr_gnd,i} + \sigma^2_{pr_air,i} + \sigma^2_{tropo,i} + \sigma^2_{iono,i}$;

M_i = the number of reference receivers used to compute the pseudo-range corrections for the *i^{th}* ranging source (indicated by the B values); and

U_i = the number of reference receivers used to compute the pseudo-range corrections for the *i^{th}* ranging source, excluding the j_{th} reference receiver.

Note: *A latent fault includes any erroneous measurement(s) that is not immediately detected by the ground subsystem, such that the broadcast data are affected and there is an induced position error in the aircraft subsystem.*

3.6.5.5.1.3 *Definition of K multipliers for Category I precision approach and APV.* The multipliers are given in Table 67.

Table 67. K-multipliers for Category I precision approach and APV

Multiplier	M_i			
	1 (Note)	2	3	4
Kffmd	6.86	5.762	5.81	5.847
Kmd	Not used	2.935	2.898	2.878
Note: *For APV I approaches supported by Type 101 messages broadcast without the B parameter block.*				

3.6.5.5.2 *GBAS positioning service.* The signal-in-space horizontal protection level is an upper confidence bound on the horizontal error in the position relative to the GBAS reference point defined as:

$$\mathbf{HPL = MAX\{HPL_{H0}, HPL_{H1}\}}$$

3.6.5.5.2.1 *Normal measurements conditions*. The horizontal protection level (HPL_{H0}), assuming that normal measurement conditions (i.e. no faults) exist in all reference receivers and on all ranging sources, is calculated as:

$$\mathbf{HPL_{H0} = Kffmd, POS^{d}major}$$

where: $$d_{major} = \sqrt{\frac{d_x^2 + d_y^2}{2} + \sqrt{\left(\frac{d_x^2 - d_y^2}{2}\right)^2 + d_{xy}^2}}$$

$$d_{2\,x} = \sum_{i=1}^{N} s_{x,i}^2 \sigma_i^2$$

$$d_{2\,y} = \sum_{i=1}^{N} s_{y,i}^2 \sigma_i^2$$

$$d_{xy} = \sum_{i=1}^{N} s_{x,i} s_{y,i} \sigma_i^2$$

$s_{x,i}$ = the partial derivative of position error in the x-direction with respect to pseudo-range error on the ith satellite

$s_{y,i}$ = the partial derivative of position error in the y-direction with respect to pseudo-range error on the ith satellite

$K_{ffmd,POS}$ = the multiplier derived from the probability of fault-free missed detection

N = the number of ranging sources used in the position solution

i = the ranging source index for ranging sources used in the position solution

σ_i = the pseudo-range error term as defined in 3.6.5.5.1.1

Note: *For the GBAS positioning service, the x and y axes define an arbitrary orthogonal basis in the horizontal plane.*

3.6.5.5.2.2 *Faulted measurement conditions.* When the Type 101 message is broadcast without B parameter blocks, the value for HPL_{H1} is defined as zero. Otherwise, the horizontal protection level (HPL_{H1}), assuming that a latent fault exists in one and only one reference receiver, is:

$$\mathbf{HPL_{H1} = max\ [HPLj]}$$

where HPLj for j = 1 to 4 is:

$$HPL_j = |B_horzj| + K_{md_POSdmajor,H1}$$

and

$$B_horz_j = \sqrt{\left(\sum_{i=1}^{N} S_{x,i}B_{i,j}\right)^2 + \left(\sum_{i=1}^{N} S_{y,i}B_{i,j}\right)^2}$$

$B_{i,j}$ = the broadcast differences between the broadcast pseudo-range corrections and the corrections obtained excluding the jth reference receiver measurement for the ith ranging source.

K_{md_POS} = the multiplier derived from the probability of missed detection given that the ground subsystem is faulted.

$$d_{major,H1} = \sqrt{\frac{d_H1_x^2 + d_H1_y^2}{2} + \sqrt{\left(\frac{d_H1_x^2 - d_H1_y^2}{2}\right)^2 + d_H1_{xy}^2}}$$

$$d_H1_x^2 = \sum_{i=1}^{N} s_{x,i}^2 \sigma_H1_i^2$$

$$d_H1_y^2 = \sum_{i=1}^{N} s_{y,i}^2 \sigma_H1_i^2$$

$$d_H1_{xy} = \sum_{i=1}^{N} s_{x,i}s_{y,i} \sigma_H1_i^2$$

Note: *For the GBAS positioning service, the x and y axes define an arbitrary orthogonal basis in the horizontal plane.*

$$\sigma_H1_i^2 = \left(\frac{M_i}{U_i}\right)\sigma_{pr_gnd,i}^2 + \sigma_{pr_air,i}^2 + \sigma_{tropo,i}^2 + \sigma_{iono,i}^2$$

M_i = the number of reference receivers used to compute the pseudo-range corrections for the ith ranging source (indicated by the B values).

U_i = the number of reference receivers used to compute the pseudo-range corrections for the ith ranging source, excluding the jth reference receiver.

Note: *A latent fault includes any erroneous measurement(s) that is not immediately detected by the ground subsystem, such that the broadcast data are affected and there is an induced position error in the aircraft subsystem.*

3.6.5.5.2.3 *Definition of K multipliers for GBAS positioning service.* The multiplier K_{ffmd_POS} is equal to 10.0 and the multiplier K_{md_POS}, is equal to 5.3.

3.6.5.6 *ALERT LIMITS*

Note: *Guidance concerning the calculation of alert limits, including approaches associated with channel numbers 40 000 to 99 999, is provided in GM on application GNSS standards and recommended practices, 7.13.*

3.6.5.6.1 *Category I precision approach alert limits.* The alert limits are defined in Tables 68 and 69. For aircraft positions at which the lateral deviation exceeds twice the deviation at which full-scale lateral deflection of a course deviation indicator is achieved, or vertical deviation exceeds twice the deviation at which full-scale fly-down deflection of a course deviation indicator is achieved, both the lateral and vertical alert limits are set to the maximum values given in the tables.

3.6.5.6.2 *APV alert limits*. The alert limits are equal to the FASLAL and FASVAL for approaches with channel numbers in the range of 20 001 to 39 999. For approaches with channel numbers in the range 40 000 to 99 999, the alert limits are stored in the on-board database.

3.6.5.7 *Channel number.* Each GBAS approach transmitted from the ground subsystem is associated with a channel number in the range of 20 001 to 39 999. If provided, the GBAS positioning service is associated with a separate channel number in the range of 20 001 to 39 999. The channel number is given by:

Channel number = 20 000 + 40(F – 108.0) + 411(S)

where

F = the data broadcast frequency (MHz)

S = RPDS or RSDS

and

RPDS = the reference path data selector for the FAS data block (as defined in 3.6.4.5.1)

RSDS = the reference station data selector for the GBAS ground subsystem (as defined in 3.6.4.3.1)

Table 68. Category I lateral alert limit

Horizontal distance of aircraft position from the LTP/FTP as translated along the final approach path (metres)	Lateral alert limit (metres)
291 < D ≤ 873 873 < D ≤ 7 500 D > 7 500	FASLAL 0.0044D (m) + FASLAL – 3.85 FASLAL + 29.15

Table 69. Category I vertical alert limit

Height above LTP/FTP of aircraft position translated onto the final approach path (feet)	Vertical alert limit (metres)
100 < H ≤ 200 200 < H ≤ 1 340 H > 1 340	FASVAL 0.02925H (ft) + FASVAL – 5.85FASVAL + 33.35

For channel numbers transmitted in the additional data block 2 of Type 2 message (as defined in 3.6.4.3.2.1), only RSDS are used.

Note 1: *When the FAS is not broadcast for an APV, the GBAS approach is associated with a channel number in the range 40 000 to 99 999.*

Note 2: *Guidance material concerning channel number selection is provided in GM on application GNSS standards and recommended practices, 7.7.*

3.6.5.8 *EPHEMERIS ERROR POSITION BOUND*

Note: *Ephemeris error position bounds are computed only for core satellite constellation ranging sources used in the position solution (j index) and not for other types of ranging sources (SBAS satellites or pseudolites) that are not subject to undetected ephemeris failures. However, the calculations of these position bounds use information from all ranging sources used in the position solution (i index).*

3.6.5.8.1 *Category I precision approach and APV.* The vertical and lateral ephemeris error position bounds are defined as:

$$VEB = \max_{j}\{VEB_j\}$$

$$LEB = \max_{j}\{LEB_j\}$$

The vertical and lateral ephemeris error position bounds for the j_{th} core satellite constellation ranging source used in the position solution are given by:

$$VEB_j = \left|s_vert_j\right| x_{air} P_j + K_{md_e,j} \sqrt{\sum_{i=1}^{N} s_vert_i^2 \times \sigma_i^2}$$

$$LEB_j = \left|s_lat_j\right| x_{air} P_j + K_{md_e,j} \sqrt{\sum_{i=1}^{N} s_lat_i^2 \times \sigma_i^2}$$

where:

$s_vert_{i \text{ or } j}$ is defined in 3.6.5.5.1.1

$s_lat_{i \text{ or } j}$ is defined in 3.6.5.5.1.1

x_{air} is defined in 3.6.5.4

N is the number of ranging sources used in the position solution

σ_i is defined in 3.6.5.5.1.1

P_j is the broadcast ephemeris decorrelation parameter for the jth ranging source

$K_{md_e,j}$ is the broadcast ephemeris missed detection multiplier for Category I precision approach and APV associated with the satellite constellation for the jth ranging source ($K_{md_e,GPS}$ or $K_{md_e,GLONASS}$)

3.6.5.8.2 *GBAS positioning service*. The horizontal ephemeris error position bound is defined as:

$HEB = MAX\{HEB_j\}$

The horizontal ephemeris error position bound for the j_{th} core satellite constellation ranging source used in the position solution is given by:

$$HEB_j = \left|s_{horz,j}\right| x_{air} P_j + K_{md_e_POS} d_{major}$$

where:

$s_{horz,j}^2 = s_{xj}^2 + s_{yj}^2$

$s_{x,j}$ is as defined in 3.6.5.5.2.1

$s_{y,j}$ is as defined in 3.6.5.5.2.1

x_{air} is defined in 3.6.5.4

P_j is the broadcast ephemeris decorrelation parameter for the jth ranging source

$K_{md_e_POS}$ is the broadcast ephemeris missed detection multiplier for the GBAS positioning service associated with the satellite constellation for the jth ranging source ($K_{md_e_POS,GPS}$ or $K_{md_e_POS,GLONASS}$)

d_{major} is as defined in 3.6.5.5.2.1

3.6.6 MESSAGE TABLES

Each GBAS message shall be coded in accordance with the corresponding message format defined in Tables 70 through 73.

Note: *Message type structure is defined in 3.6.4.1.*

Table 70. Type 1 pseudo-range corrections message

Data content	Bits used	Range of values	Resolution
Modified Z-count	14	0 to 1 199.9 s	0.1 s
Additional message flag	2	0 to 3	1
Number of measurements (N)	5	0 to 18	1
Measurement type	3	0 to 7	1
Ephemeris decorrelation parameter (P)	8	0 to 1.275 × 10–3 m/m	5 × 10–6 m/m
Ephemeris CRC	16	—	—
Source availability duration	8	0 to 2 540 s	10 s
For N measurement blocks			
Ranging source ID	8	1 to 255	1
Issue of data (IOD)	8	0 to 255	1
Pseudo-range correction (PRC)	16	±327.67 m	0.01 m
Range rate correction (RRC)	16	±32.767 m/s	0.001 m/s
$\sigma_{pr\ gnd}$	8	0 to 5.08 m	0.02 m
B_1	8	±6.35 m	0.05 m
B_2	8	±6.35 m	0.05 m
B_3	8	±6.35 m	0.05 m
B_4	8	±6.35 m	0.05 m

Table 70A. Type 101 GRAS pseudo-range corrections message

Data content	Bits used	Range of values	Resolution
Modified Z-count	14	0 to 1 199.9 s	0.1 s
Additional message flag	2	0 to 3	1
Number of measurements (N)	5	0 to 18	1
Measurement type	3	0 to 7	1
Ephemeris decorrelation parameter (P)	8	0 to 1.275 × 10–3 m/m	5 × 10–6 m/m
Ephemeris CRC	16	—	—
Source availability duration	8	0 to 2540 s	10 s
Number of B parameters	1	0 or 4	—
Spare	7	—	—
For N measurement blocks			
Ranging source ID	8	1 to 255	1
Issue of data (IOD)	8	0 to 255	1
Pseudo-range correction (PRC)	16	±327.67 m	0.01 m
Range rate correction (RRC)	16	±32.767 m/s	0.001 m/s
σpr_gnd	8	0 to 50.8 m	0.2 m
B parameter block (if provided)			
B1	8	±25.4 m	0.2 m
B2	8	±25.4 m	0.2 m
B3	8	±25.4 m	0.2 m
B4	8	±25.4 m	0.2 m

Table 71A. Type 2 GBAS-related data message

Data content	Bits used	Range of values	Resolution
GBAS reference receivers	2	2 to 4	—
Ground accuracy designator letter	2	—	—
Skpare	1	—	—
GBAS continuity/integrity designator	3	0 to 7	1
Local magnetic variation	11	±180°	0.25°
Spare	5	—	—
$\sigma_{vert_iono_gradient}$	8	0 to 25.5 × 10^{-6} m/m	0.1 × 10^{-6} m/m
Refractivity index	8	16 to 781	3
Scale height	8	0 to 25 500 m	100 m
Refractivity uncertainty	8	0 to 255	1
Latitude	32	±90.0°	0.0005 arcsec
Longitude	32	±180.0°	0.0005 arcsec
GBAS reference point height	24	±83 886.07 m	0.01 m
Additional data block 1 (if provided)			
Reference station data selector	8	0 to 48	1
Maximum use distance (Dmax)	8	2 to 510 km	2 km
Kmd_e_POS,GPS	8	0 to 12.75	0.05
Kmd_e,GPS	8	0 to 12.75	0.05
Kmd_e_POS,GLONASS	8	0 to 12.75	0.05
Kmd_e,GLONASS	8	0 to 12.75	0.05
Additional data block 2 (if provided)			
Additional data block length	8	2 to 255	1
Additional data block number	8	2 to 255	1
Additional data parameters	Variable	—	—

Table 71B. Type 3 null message

Data content	Bits used	Range of values	Resolution
Filler	Variable (Note)	N/A	N/A

Note: *The number of bytes in the filler field is 10 less than the message length field in the message header as defined in section 3.6.3.4.*

Table 72. Type 4 FAS data message

Data content	Bits used	Range of values	Resolution
For N data sets			
Data set length	8	2 to 212	1 byte
FAS data block	304	—	—
FAS vertical alert limit/approach status	8		
(1) when associated approach performance designator indicates APV-I (APD coded as 0)		0 to 50.8 m	0.2 m
(2) when associated approach performance designator does not indicate APV-I (APD not coded as 0)		0 to 25.4 m	0.1 m
FAS lateral alert limit/approach status	8	0 to 50.8 m	0.2 m

Table 73. Type 5 predicted ranging source availability message

Data content	Bits used	Range of values	Resolution
Modified Z-count	14	0 to 1 199.9 s	0.1 s
Spare	2	—	—
Number of impacted sources (N)	8	0 to 31	1
For N impacted sources			
Ranging source ID	8	1 to 255	1
Source availability sense	1	—	—
Source availability duration	7	0 to 1 270 s	10 s
Number of obstructed approaches (A)	8	0 to 255	1
For A obstructed approaches			
Reference path data selector	8	0 to 48	—
Number of impacted sources for this approach (N_A)	8	1 to 31	1
For N_A impacted ranging sources for this approach			
Ranging source ID	8	1 to 255	1
Source availability sense	1	—	—
Source availability duration	7	0 to 1 270 s	10 s

3.6.7 NON-AIRCRAFT ELEMENTS

3.6.7.1 *PERFORMANCE*

3.6.7.1.1 *Accuracy*

3.6.7.1.1.1 The root-mean-square (RMS) (1 sigma) of the ground subsystem contribution to the corrected pseudo-range accuracy for GPS and GLONASS satellites shall be:

$$RMS_{pr_gnd} \leq \sqrt{\frac{(a_0 + a_1 e^{-\theta_n/\theta_0})^2}{M} + (a_2)^2}$$

where

M = the number of GNSS reference receivers, as indicated in the Type 2 message parameter (3.6.4.3), or, when this parameter is coded to indicate “not applicable”, the value of M is defined as 1;

n = n^{th} ranging source;

θ_n = elevation angle for the nth ranging source; and

a_0, a_1, a_2, and θ_0 = parameters defined in Tables 74 and 75 for each of the defined ground accuracy designators (GADs).

Note 1: *The GBAS ground subsystem accuracy requirement is determined by the GAD letter and the number of installed reference receivers.*

Note 2: *The ground subsystem contribution to the corrected pseudo-range error specified by the curves defined in Tables B-74 and B-75 and the contribution to the SBAS satellites do not include aircraft noise and aircraft multipath.*

Table 74. GBAS — GPS accuracy requirement parameters

Ground accuracy designator letter	Θ_n (degrees)	a_0 (metres)	a_1 (metres)	θ_0 (degrees)	a_2 (metres)
A	≥ 5	0.5	1.65	14.3	0.08
B	≥ 5	0.16	1.07	15.5	0.08
C	> 35	0.15	0.84	15.5	0.04
	5 to 35	0.24	0	—	0.04

Table 75. GBAS — GLONASS accuracy requirement parameters

Ground accuracy designator letter	Θ_n (degrees)	a_0 (metres)	a_1 (metres)	θ_0 (degrees)	a_2 (metres)
A	≥ 5	1.58	5.18	14.3	0.078
B	≥ 5	0.3	2.12	15.5	0.078
C	> 35	0.3	1.68	15.5	0.042
	5 to 35	0.48	0	—	0.042

3.6.7.1.1.2 The RMS of the ground subsystem contribution to the corrected pseudo-range accuracy for SBAS satellites shall be:

$$\mathrm{RMS}_{\mathrm{pr_gnd}} \leq \frac{1.8}{\sqrt{\mathrm{M}}} (\mathrm{metres})$$

where M is as defined in 3.6.7.1.1.1.

Note: *GAD classifications for SBAS ranging sources are under development.*

3.6.7.1.2 *Integrity*

3.6.7.1.2.1 *GBAS ground subsystem integrity risk*

3.6.7.1.2.1.1 *Category I precision approach and APV.* For a GBAS ground subsystem that provides the Category I precision approach or APV, the integrity risk shall be less than 1.5×10^{-7} per approach.

Note 1: *The integrity risk assigned to the GBAS ground subsystem is a subset of the GBAS signal-in-space integrity risk, where the protection level integrity risk (3.6.7.1.2.2.1) has been excluded and the effects of all other GBAS, SBAS and core satellite constellations failures are included. The GBAS ground subsystem integrity risk includes the integrity risk of satellite signal monitoring required in 3.6.7.2.6 and the integrity risk associated with the monitoring in 3.6.7.3.*

Note 2: *GBAS signal-in-space integrity risk is defined as the probability that the ground subsystem provides information which when processed by a fault-free receiver, using any GBAS data that could be used by the aircraft, results in an out-of-tolerance lateral or vertical relative position error without annunciation for a period longer than the maximum time-to-alert. An out-of-tolerance lateral or vertical relative position error is defined as an error that exceeds the Category I precision approach or APV protection level and, if additional data block 1 is broadcast, the ephemeris error position bound.*

3.6.7.1.2.1.1.1 The GBAS ground subsystem maximum time-to-alert shall be less than or equal to 3 seconds when Type 1 messages are broadcast.

Note: *The time-to-alert above is the time between the onset of the out-of-tolerance lateral or vertical relative position error and the transmission of the last bit of the message that contains the integrity data that reflects the condition.*

3.6.7.1.2.1.1.2 The GBAS ground subsystem maximum time-to-alert shall be less than or equal to 5.5 seconds when Type 101 messages are broadcast.

3.6.7.1.2.1.1.3 For Category I precision approach, the value FASLAL for each FAS block, as defined in the FAS lateral alert limit field of the Type 4 message shall be no greater than 40 metres, and the value FASVAL for each FAS block, as defined in the FAS vertical alert limit field of the Type 4 message, shall be no greater than 10 metres.

3.6.7.1.2.1.1.4 For APV, the value FASLAL and FASVAL shall be no greater than the lateral and vertical alert limits given in AAR-AC I para. 3.7.2.4.

3.6.7.1.2.1.2 *GBAS positioning service*. For GBAS ground subsystem that provides the GBAS positioning service, integrity risk shall be less than 9.9×10^{-8} per hour.

Note 1: *The integrity risk assigned to the GBAS ground subsystem is a subset of the GBAS signal-in-space integrity risk, where the protection level integrity risk (3.6.7.1.2.2.2) has been excluded and the effects of all other GBAS, SBAS and core satellite constellations failures are included. The GBAS ground subsystem integrity risk includes the integrity risk of satellite signal monitoring required in 3.6.7.2.6 and the integrity risk associated with the monitoring in 3.6.7.3.*

Note 2: *GBAS signal-in-space integrity risk is defined as the probability that the ground subsystem provides information which when processed by a fault-free receiver, using any GBAS data that could be used by the aircraft, results in an out-of-tolerance horizontal relative position error without annunciation for a period longer than the maximum time-toalert. An out-of-tolerance horizontal relative position error is defined as an error that exceeds both the horizontal protection level and the horizontal ephemeris error position bound.*

3.6.7.1.2.1.2.1 The GBAS ground subsystem maximum time-to-alert shall be less than or equal to 3 seconds when Type 1 messages are broadcast and less than or equal to 5.5 seconds when Type 101 messages are broadcast.

Note: *The time-to-alert above is the time between the onset of the out-of-tolerance horizontal relative position error and the transmission of the last bit of the message that contains the integrity data that reflects the condition.*

3.6.7.1.2.2 *Protection level integrity risk*

3.6.7.1.2.2.1 For a GBAS ground subsystem that provides the Category I precision approach or APV, the protection level integrity risk shall be less than 5×10^{-8} per approach.

Note: *The Category I precision approach and APV protection level integrity risk is the integrity risk due to undetected errors in position relative to the GBAS reference point greater than the associated protection levels under the two following conditions:*

a) normal measurement conditions defined in 3.6.5.5.1.1; and

b) faulted measurement conditions defined in 3.6.5.5.1.2.

3.6.7.1.2.2.2 For a GBAS ground subsystem that provides the positioning service, protection level integrity risk shall be less than 10^{-9} per hour.

Note: *The GBAS positioning service protection level integrity risk is the integrity risk due to undetected errors in the horizontal position relative to the GBAS reference point greater than the GBAS positioning service protection level under the two following conditions:*

a) normal measurement conditions defined in 3.6.5.5.2.1; and

b) faulted measurement conditions defined in 3.6.5.5.2.2.

3.6.7.1.3 *Continuity of service*

3.6.7.1.3.1 *Continuity of service for Category I precision approach and APV.* The GBAS ground subsystem continuity of service shall be greater than or equal to $1 - 8.0 \times 10^{-6}$ per 15 seconds.

Note: *The GBAS ground subsystem continuity of service is the average probability per 15-second period that the VHF data broadcast transmits data in tolerance, VHF data broadcast field strength is within the specified range and the protection levels are lower than the alert limits, including configuration changes that occur due to the space segment. This continuity of service requirement is the entire allocation of the signal-in-space continuity requirement from Chapter 3, Table 3.7.2.4-1, and therefore all continuity risks included in that requirement must be accounted for by the ground subsystem provider.*

3.6.7.1.3.2 *Continuity of service for positioning service*

Note: *For GBAS ground subsystems that provide the GBAS positioning service, there may be additional continuity requirements depending on the intended operations.*

3.6.7.2 *FUNCTIONAL REQUIREMENTS*

3.6.7.2.1 *General*

3.6.7.2.1.1 *Data broadcast rates*

3.6.7.2.1.1.1 A GBAS ground subsystem that supports Category I precision approach or APV-II shall broadcast Type 1 messages. A GBAS ground subsystem that does not support Category I precision approach or APV-II shall broadcast either Type 1 or Type 101 messages. A GBAS ground subsystem shall not broadcast both Type 1 and Type 101 messages.

Note: *Guidance material concerning usage of the Type 101 message is provided in GM on application GNSS standards and recommended practices, 7.18.*

3.6.7.2.1.1.2 Each GBAS ground subsystem shall broadcast Type 2 messages.

3.6.7.2.1.1.3 Each GBAS ground subsystem shall broadcast FAS blocks in Type 4 messages for all Category I precision approaches supported by that GBAS ground subsystem. If a GBAS ground subsystem supports APV and does not broadcast FAS blocks for the corresponding approaches, it shall broadcast additional data block 1 in the Type 2 message.

Note: *FAS blocks for APV procedures may be held within a database on board the aircraft. Broadcasting additional data block 1 allows the airborne receiver to select the GBAS ground subsystem that supports the approach procedures in the airborne database. FAS blocks may also be broadcast to support operations by aircraft without an airborne database. These procedures use different channel numbers as described in GM on application GNSS standards and recommended practices, 7.7.*

3.6.7.2.1.1.4 When the Type 5 message is used, the ground subsystem shall broadcast the Type 5 message at a rate in accordance with Table 76.

Note: *When the standard 5-degree mask is not adequate to describe satellite visibility at either the ground subsystem antennas or at an aircraft during a specific approach, the Type 5 message may be used to broadcast additional information to the aircraft.*

3.6.7.2.1.1.5 *Data broadcast rates.* For all message types required to be broadcast, messages meeting the field strength requirements of Chapter 3, 3.7.3.5.4.4.1.2 and 3.7.3.5.4.4.2.2 and the minimum rates shown in Table76 shall be provided at every point within the coverage. The total message broadcast rates from all antenna systems of the ground subsystem combined shall not exceed the maximum rates shown in Table 76.

Note: *Guidance material concerning the use of multiple antenna systems is provided in GM on application GNSS standards and recommended practices, 7.12.4.*

3.6.7.2.1.2 *Message block identifier.* The MBI shall be set to either normal or test according to the coding given in 3.6.3.4.1.

Table 76. GBAS VHF data broadcast rates

Message type	Minimum broadcast rate	Maximum broadcast rate
1 or 101	For each measurement type: All measurement blocks once per frame (Note)	For each measurement type: All measurement blocks once per slot
2	Once per 20 consecutive frames	Once per frame
4	All FAS blocks once per 20 consecutive frames	All FAS blocks once per frame
5	All impacted sources once per 20 consecutive frames	All impacted sources once per 5 consecutive frames

Note: *One Type 1 or Type 101 message or two Type 1 or Type 101 messages that are linked using the additional message flag described in 3.6.4.2.*

3.6.7.2.1.3 *VDB authentication*

Note: *This section is reserved for forward compatibility with future authentication functions.*

3.6.7.2.2 *Pseudo-range corrections*

3.6.7.2.2.1 *Message latency*. The time between the time indicated by the modified Z-count and the last bit of the broadcast Type 1 or Type 101 message shall not exceed 0.5 seconds.

3.6.7.2.2.2 *Low-frequency data*. Except during an ephemeris change, the first ranging source in the message shall sequence so that low-frequency data (as defined in 3.6.4.2.1 for Type 1 message, 3.6.4.11.1 for Type 11 message and 3.6.4.10.1 for Type 101 message) for each core satellite constellation's ranging source are transmitted at least once every 10 seconds. During an ephemeris change, the first ranging source shall sequence so that the low-frequency data for each core satellite constellation's ranging source are transmitted at least once every 27 seconds. When new ephemeris data are received from a core satellite constellation's ranging source, the ground subsystem shall use the previous ephemeris data from each satellite until the new ephemeris data have been continuously received for at least 2 minutes but shall make a transition to the new ephemeris data before 3 minutes have passed.

When this transition is made to using the new ephemeris data for a given ranging source, the ground subsystem shall broadcast the new ephemeris CRC for all occurrences of that ranging source in the low-frequency information of Type 1 or Type 101 message in the next 3 consecutive frames. For a given ranging source, the ground subsystem shall continue to transmit data corresponding to the previous ephemeris data until the new CRC ephemeris is transmitted in the low-frequency data of Type 1 or Type 101 message (see *Note*). If the ephemeris CRC changes and the IOD does not, the ground subsystem shall consider the ranging source invalid.

Note: *The delay before the ephemeris transition allow sufficient time for the aircraft subsystem to collect new ephemeris data.*

3.6.7.2.2.2.1 **Recommendation. —** *The ephemeris decorrelation parameter and the ephemeris CRC for each core satellite constellation's ranging source should be broadcast as frequently as possible.*

3.6.7.2.2.3 *Broadcast pseudo-range correction*. Each broadcast pseudo-range correction shall be determined by combining the pseudo-range correction estimates for the relevant ranging source calculated from each of the reference receivers. For each satellite, the measurements used in this combination shall be obtained from the same ephemeris data. The corrections shall be based on smoothed code pseudo-range measurements for each satellite using the carrier measurement from a smoothing filter in accordance with 3.6.5.1.

3.6.7.2.2.4 *Broadcast signal-in-space integrity parameters*. The ground subsystem shall provide σ_{pr_gnd} and B parameters for each pseudo-range correction in Type 1 message such that the protection level integrity risk requirements defined in 3.6.7.1.2.2 are satisfied. The ground subsystem shall provide σ_{pr_gnd} and, if necessary, B parameters for each pseudo-range correction in Type 101 message such that the protection level integrity risk requirements defined in 3.6.7.1.2.2 are satisfied.

Note: *Broadcast of the B parameters are optional for Type 101 messages. Guidance material regarding the B parameters in Type 101 messages is contained in GM on application GNSS standards and recommended practices, 7.5.11.*

3.6.7.2.2.5 **Recommendation. —** *Reference receiver measurements should be monitored. Faulted measurements or failed reference receivers should not be used to compute the pseudo-range corrections.*

3.6.7.2.2.6 *Repeated transmission of Type 1 or Type 101 messages.* For a given measurement type and within a given frame, all broadcasts of Type 1 or Type 101 messages or linked pairs from all GBAS broadcast stations that share a common GBAS identification, shall have identical data content.

3.6.7.2.2.7 *Issue of data.* The GBAS ground subsystem shall set the IOD field in each ranging source measurement block to be the IOD value received from the ranging source that corresponds to the ephemeris data used to compute the pseudo-range correction.

3.6.7.2.2.8 *Application of signal error models*. Ionospheric and tropospheric corrections shall not be applied to the pseudo-ranges used to calculate the pseudo-range corrections.

3.6.7.2.2.9 *Linked pair of Type 1 or Type 101 messages.* If a linked pair of Type 1 or Type 101 messages is transmitted then,

a) the two messages shall have the same modified Z-count;

b) the minimum number of pseudo-range corrections in each message shall be one;

c) the measurement block for a given satellite shall not be broadcast more than once in a linked pair of messages;

d) the two messages shall be broadcast in different time slots; and

e) the order of the B values in the two messages shall be the same.

3.6.7.2.2.10 *Modified Z-count update.* The modified Z-count for Type 1 or Type 101 messages of a given measurement type shall advance every frame.

3.6.7.2.2.11 *Ephemeris decorrelation parameters*

3.6.7.2.2.11.1 *Category I precision approach and APV*. For ground subsystems that broadcast the additional data block 1 in the Type 2 message, the ground subsystem shall broadcast the ephemeris decorrelation parameter for each core satellite constellation ranging source such that the ground subsystem integrity risk of 3.6.7.1.2.1.1 is met.

3.6.7.2.2.11.2 *GBAS positioning service*. For ground subsystems that provide the GBAS positioning service, the ground subsystem shall broadcast the ephemeris decorrelation parameter for each core satellite constellation's ranging source such that the ground subsystem integrity risk of 3.6.7.1.2.1.2 is met.

3.6.7.2.3 *GBAS-related data*

3.6.7.2.3.1 *Tropospheric delay parameters.* The ground subsystem shall broadcast a refractivity index, scale height, and refractivity uncertainty in a Type 2 message such that the protection level integrity risk requirements defined in 3.6.7.1.2.2 are satisfied.

3.6.7.2.3.2 *GCID indication*. If the ground subsystem meets the requirements of 3.6.7.1.2.1.1, 3.6.7.1.2.2.1 and 3.6.7.1.3.1 the GCID shall be set to 1 otherwise it shall be set to 7.

3.6.7.2.3.3 *GBAS reference antenna phase centre position accuracy*. For each GBAS reference receiver, the reference antenna phase centre position error shall be less than 8 cm relative to the GBAS reference point.

3.6.7.2.3.4 **Recommendation. —** *GBAS reference point survey accuracy. The survey error of the GBAS reference point, relative to WGS-84, should be less than 0.25 m vertical and 1 m horizontal.*

Note: *Relevant guidance material is given in GM on application GNSS standards and recommended practices, 7.16.*

3.6.7.2.3.5 *Ionospheric uncertainty estimate parameter.* The ground subsystem shall broadcast an ionospheric delay gradient parameter in the Type 2 message such that the protection level integrity risk requirements defined in 3.6.7.1.2.2 are satisfied.

3.6.7.2.3.6 For ground subsystems that provide the GBAS positioning service, the ground subsystem shall broadcast the ephemeris error position bound parameters using additional data block 1 in the Type 2 message.

3.6.7.2.3.7 **Recommendation. —** *All ground subsystems should broadcast the ephemeris error position bound parameters using additional data block 1 in the Type 2 message.*

3.6.7.2.3.8 For ground subsystems that broadcast additional data block 1 in the Type 2 message, the following requirements shall apply:

3.6.7.2.3.8.1 *Maximum use distance*. The ground subsystem shall provide the distance (D_{max}) from the GBAS reference point that defines a volume within which the ground subsystem integrity risk in 3.6.7.1.2.1 and the protection level integrity risk in 3.6.7.1.2.2 are met.

3.6.7.2.3.8.2 *Ephemeris missed detection parameters*. The ground subsystem shall broadcast the ephemeris missed detection parameters for each core satellite constellation such that the ground subsystem integrity risk of 3.6.7.1.2.1 is met.

3.6.7.2.3.8.3 *GBAS positioning service indication*. If the ground subsystem does not meet the requirements of 3.6.7.1.2.1.2 and 3.6.7.1.2.2.2, the ground subsystem shall indicate using the RSDS parameter that the GBAS positioning service is not provided.

3.6.7.2.3.9 If the VHF data broadcast is transmitted at more than one frequency within the GRAS service area, each GBAS broadcast station within the GRAS ground subsystem shall broadcast additional data blocks 1 and 2.

3.6.7.2.3.9.1 **Recommendation. —** *The VHF data broadcast should include additional data block 2 parameters to identify channel numbers and locations of adjacent and nearby GBAS broadcast stations within the GRAS ground subsystem.*

Note: *This facilitates the transition from one GBAS broadcast station to other GBAS broadcast stations in the GRAS ground subsystem.*

3.6.7.2.4 *Final approach segment data*

3.6.7.2.4.1 *FAS data points accuracy*. The relative survey error between the FAS data points and the GBAS reference point shall be less than 0.25 metres vertical and 0.40 metres horizontal.

3.6.7.2.4.2 ***Recommendation. —*** *The final approach segment CRC should be assigned at the time of procedure design, and kept as an integral part of the FAS data block from that time onward.*

3.6.7.2.4.3 **Recommendation. —** *The GBAS should allow the capability to set the FASVAL and FASLAL for any FAS data block to "1111 1111" to limit the approach to lateral only or to indicate that the approach must not be used, respectively.*

3.6.7.2.5 *Predicted ranging source availability data*

Note: *Ranging source availability data are optional for Category I and APV and may be required for possible future operations.*

3.6.7.2.6 *Integrity monitoring for GNSS ranging sources*. The ground subsystem shall monitor the satellite signals to detect conditions that will result in improper operation of differential processing for airborne receivers complying with the tracking constraints in GM on application GNSS standards and recommended practices, 8.11. The ground subsystem shall use the strongest correlation peak in all receivers used to generate the pseudo-range corrections. The monitor time-to-alert shall comply with 3.6.7.1.2. The monitor action shall be to set σ_{pr_gnd} to the bit pattern "1111 1111" for the satellite

or to exclude the satellite from the Type 1 or Type 101 message. The ground subsystem shall also detect conditions that cause more than one zero crossing for airborne receivers that use the Early-Late discriminator function as described in GM on application GNSS standards and recommended practices, 8.11.

3.6.7.3 *MONITORING*

3.6.7.3.1 *RF monitoring*

3.6.7.3.1.1 *VHF data broadcast monitoring.* The data broadcast transmissions shall be monitored. The transmission of the data shall cease within 0.5 seconds in case of continuous disagreement during any 3-second period between the transmitted application data and the application data derived or stored by the monitoring system prior to transmission. For FAST D ground subsystems, the transmission of the data Type 11 messages shall cease within 0.5 seconds in case of continuous disagreement during any 1-second period between the transmitted application data and the application data derived or stored by the monitoring system prior to transmission.

Note: *For ground subsystems that support authentication, ceasing the transmission of data means ceasing the transmission of Type 1 messages and/or Type 11 messages if applicable or ceasing the transmission of Type 101 messages. In accordance with 3.6.7.4.1.3, the ground subsystem must still transmit messages such that the defined percentage or more of every assigned slot is occupied. This can be accomplished by transmitting Type 2, Type 3, Type 4 and/or Type 5 messages.*

3.6.7.3.1.2 *TDMA slot monitoring.* The risk that the ground subsystem transmits a signal in an unassigned slot and fails to detect an out-of-slot transmission, which exceeds that allowed in 3.6.2.6, within 1 second, shall be less than 1×10^{-7} in any 30-second period. If out-of-slot transmissions are detected, the ground subsystem shall terminate all data broadcast transmissions within 0.5 seconds.

3.6.7.3.1.3 *VDB transmitter power monitor.* The probability that the horizontally or elliptically polarized signal's transmitted power increases by more than 3 dB from the nominal power for more than 1 second shall be less than 2.0×10^{-7} in any 30-second period.

Note: *The vertical component is only monitored for GBAS/E equipment.*

3.6.7.3.2 *Data monitoring*

3.6.7.3.2.1 *Broadcast quality monitor*. The ground subsystem monitoring shall comply with the time-to-alert requirements given in 3.6.7.1.2.1. The monitoring action shall be one of the following:

a) to broadcast Type 1 or Type 101 messages with no measurement blocks; or

b) to broadcast Type 1 or Type 101 messages with the $\sigma_{pr_gnd,i}$ field set to indicate the ranging source is invalid for every ranging source included in the previously transmitted frame; or

c) to terminate the data broadcast.

Note: *Monitoring actions a) and b) are preferred to c) if the particular failure mode permits such a response, because actions a) and b) typically have a reduced signal-in-space time-to-alert.*

3.6.7.3.3 *Integrity monitoring for GNSS ranging sources*

3.6.7.3.3.1 The ground subsystem shall monitor the satellite signals to detect conditions that will result in improper operation of differential processing for airborne receivers complying with the tracking constraints in GM, 8.11. The monitor time-to-alert shall comply with 3.6.7.1.2. The monitor action shall be to set σpr_gnd to the bit pattern "1111 1111" for the satellite or to exclude the satellite from the Type 1, Type 11 or Type 101 message.

3.6.7.3.3.1.1 The ground subsystem shall use the strongest correlation peak in all receivers used to generate the pseudorange corrections. The ground subsystem shall also detect conditions that cause more than one zero crossing for airborne receivers that use the early-late discriminator function as described in GM, 8.11.

3.6.7.3.3.2 For FAST D ground subsystems, the probability that the error at the landing threshold point (LTP) of any runway for which the ground subsystem supports GAST D, |Er|, on the 30-second smoothed corrected pseudo-range (see 3.6.5.2) caused by a ranging source fault, is not detected and reflected in the broadcast Type 11 message within 1.5 s shall fall within the region specified in Table 76A. Ranging source faults for which this requirement applies are:

a) signal deformation;

b) code/carrier divergence;

c) excessive pseudo-range acceleration, such as a step or other rapid change; and

d) erroneous broadcast of ephemeris data from the satellite.

Note 1: *Refer to GM, 8.11 for further information on GAEC-D avionics relating to signal deformation fault.*

Note 2: *Upon detection, a ranging source fault may be reflected in the Type 11 message by either:*
a) removing the correction for the associated satellite from the Type 11 message; or
b) marking the satellite as invalid using the coding of σpr_gnd_D (see 3.6.4.11.4).

Note 3: *The acceptable probability of a missed detection region is defined with respect to differentially corrected pseudo-range error. The differentially corrected pseudo-range error, |Er|, includes the error resulting from a single ranging source fault, given the correct application of GBAS ground subsystem message Type 11 broadcast corrections (i.e. pseudorange correction and range rate corrections defined in section 3.6.4.11) by the aircraft avionics as specified within section 3.6.8.3. Evaluation of Pmd performance includes GBAS ground subsystem fault-free noise. The growth of |Er| with time should consider the data latency of the ground subsystem, but not the airborne latency, as described in GM, 7.5.14.*

Note 4: *Additional information regarding the ranging source fault conditions and monitoring requirements for FAST D ground subsystems may be found in GM, 7.5.14. Missed messages do not need to be considered as part of compliance with this requirement.*

Table 76A. P md_limit parameters

Probability of Missed Detection	Pseudo-range Error (metres)
$P_{md_limit} \leq 1$	$0 \leq \lvert Er \rvert < 0.75$
$P_{md_limit} \leq 10^{(-2.56 \times \lvert Er \rvert + 1.92)}$	$0.75 \leq \lvert Er \rvert < 2.7$
$P_{md_limit} \leq 10^{-5}$	$2.7 \leq \lvert Er \rvert < \infty$

3.6.7.3.3.3 For FAST D ground subsystems, the probability that an error at the landing threshold point (LTP) of any runway for which the ground subsystem supports GAST D, |Er|, greater than 1.6 metres on the 30-second smoothed corrected pseudo-range (see 3.6.5.2), caused by a ranging source fault, is not detected and reflected in the broadcast Type 11 message within 1.5 seconds shall be less than 1×10^{-9} in any one landing when multiplied by the prior probability (Papriori). Ranging source faults for which this requirement applies are:

a) signal deformation ;

b) code/carrier divergence;

c) excessive pseudo-range acceleration, such as a step or other rapid change; and

d) erroneous broadcast of ephemeris data from the satellite.

Note 1: *Refer to GM, 8.11 for further information on GAEC-D avionics relating to signal deformation fault.*

Note 2: *It is intended that the prior probability of each ranging source fault (Papriori) be the same value that is used in the analysis to show compliance with error bounding requirements for FAST C and D (see 3.6.5.5.1.1.1).*

Note 3: *Upon detection, a ranging source fault may be reflected in the Type 11 message by either:*
a) removing the faulty satellite correction from the Type 11 message; or
b) marking the satellite as invalid using the coding of σpr_gnd_D (see 3.6.4.11.4).

Note 4: *Additional information regarding the ranging source fault conditions and monitoring requirements for FAST D ground subsystems may be found in GM, 7.5.14. Missed messages do not need to be considered as part of compliance with this requirement.*

3.6.7.3.4 *Ionospheric gradient mitigation*

For FAST D ground subsystems, the probability of an error (|Er|) in the 30-second smoothed corrected pseudo-range at the landing threshold point (LTP) for every GAST D supported runway that:

a) is caused by a spatial ionospheric delay gradient,

b) is greater than the EIG value computed from a broadcast Type 2 message, and c) is not detected and reflected in the broadcast Type 11 message within 1.5 seconds shall be less than 1×10^{-9} in any one landing. The FAST D ground subsystem shall limit the Type 2 broadcast parameters to ensure that the maximum EIG at every LTP supporting GAST D operations shall not exceed 2.75 metres.

Note: *The total probability of an undetected delay gradient includes the prior probability of the gradient and the monitor(s) probability of missed detection.*

3.6.7.4 *FUNCTIONAL REQUIREMENTS FOR AUTHENTICATION PROTOCOLS*

3.6.7.4.1 *Functional requirements for ground subsystems that support authentication*

3.6.7.4.1.1 The ground system shall broadcast the additional data block 4 with the Type 2 message with the slot group definition field coded to indicate which slots are assigned to the ground station.

3.6.7.4.1.2 The ground subsystem shall broadcast every Type 2 message in the slot that corresponds to the SSID coding for the ground subsystem. Slot A is represented by

SSID = 0, B by 1, C by 2, and H by 7. The group of MT 2 sanctioned slots then also includes the next slot after the slot corresponding to the station SSID if it exists in the frame. If there is not an additional slot before the end of the frame, only the SSID is included in the set.

Note: *For example, the MT 2 sanctioned slot group for SSID = 0 would include slots {A, B} while the MT 2 sanctioned slot group for SSID = 6 would include slots {G, H}. The MT 2 sanctioned slot group for SSID = 7 includes slot {H} only.*

3.6.7.4.1.2.1 The set of slots assigned to a ground station shall include at a minimum all the slots in the MT 2 sanctioned slots as described in section 3.6.7.4.1.2.

3.6.7.4.1.3 *Assigned slot occupancy*. The ground subsystem shall transmit messages such that 87 per cent or more of every assigned slot is occupied. If necessary, Type 3 messages will be used to fill unused space in any assigned time slot.

3.6.7.4.1.4 *Reference path identifier coding*. Every reference path identifier included in every final approach segment data block broadcast by the ground subsystem via the Type 4 messages shall have the first letter selected to indicate the SSID of the ground station in accordance with the following coding.

Coding: A = SSID of 0
X = SSID of 1
Z = SSID of 2
J = SSID of 3
C = SSID of 4
V = SSID of 5
P = SSID of 6
T = SSID of 7

3.6.7.4.2 *Functional requirements for ground subsystems that do not support authentication*

3.6.7.4.2.1 *Reference path indicator coding*. Characters in this set: {A X Z J C V P T} shall not be used as the first character of the reference path identifier included in any FAS block broadcast by the ground station via the Type 4 messages.

3.6.8 AIRCRAFT ELEMENTS

3.6.8.1 *GNSS receiver.* The GBAS-capable GNSS receiver shall process signals of GBAS in accordance with the requirements specified in this section as well as with requirements in 3.1.3.1 and/or 3.2.3.1 and/or 3.5.8.1.

3.6.8.2 *PERFORMANCE REQUIREMENTS*

3.6.8.2.1 *GBAS aircraft receiver accuracy*

3.6.8.2.1.1 The RMS of the total aircraft receiver contribution to the error for GPS and GLONASS shall be:

$$\mathbf{RMS_{pr_air}(\theta n) \leq a_0 + a_1 \times e^{-(\theta n/\theta 0)}}$$

where

n = the nth ranging source;

θ_n = the elevation angle for the nth ranging source; and

a_0, a_1, and θ_0 = as defined in Table 77 for GPS and Table 78 for GLONASS.

3.6.8.2.1.2 The RMS of the total aircraft receiver contribution to the error for SBAS satellites shall be as defined in 3.5.8.2.1 for each of the defined aircraft accuracy designators.

Note: *The aircraft receiver contribution does not include the measurement error induced by airframe multipath.*

Table 77. Aircraft GPS receiver accuracy requirement

Aircraft accuracy designator	θ_n (degrees)	a_0 (metres)	a_1 (metres)	θ_0 (degrees)
A	≥5	0.15	0.43	6.9
B	≥5	0.11	0.13	4

Table 78. Aircraft GLONASS receiver accuracy requirement

Aircraft accuracy designator	θ_n (degrees)	a_0 (metres)	a_1 (metres)	θ_0 (degrees)
A	≥5	0.39	0.9	5.7
B	≥5	0.105	0.25	5.5

3.6.8.2.2 VHF data broadcast receiver performance

3.6.8.2.2.1 *VHF data broadcast tuning range.* The VHF data broadcast receiver shall be capable of tuning frequencies in the range of 108.000 – 117.975 MHz in increments of 25 kHz.

3.6.8.2.2.2 *VHF data broadcast capture range.* The VHF data broadcast receiver shall be capable of acquiring and maintaining lock on signals within ±418 Hz of the nominal assigned frequency.

Note: *The frequency stability of the GBAS ground subsystem, and the worst-case doppler shift due to the motion of the aircraft, are reflected in the above requirement. The dynamic range of the automatic frequency control should also consider the frequency-stability error budget of the aircraft VHF data broadcast receiver.*

3.6.8.2.2.3 *VHF data broadcast sensitivity, range and message failure rate*. The VHF data broadcast receiver shall achieve a message failure rate less than or equal to one failed message per 1 000 full-length (222 bytes) application data messages, while operating over a range from –87 dBm to –1 dBm. This requirement shall apply when the variation in the average received signal power between successive bursts in a given time slot does not exceed 40 dB. Failed messages include those lost by the VHF data broadcast receiver system or which do not pass the CRC after application of the FEC.

Note: *Aircraft VHF data broadcast receiving antenna can be horizontally or vertically polarized. Due to the difference in the signal strength of horizontally and vertically polarized components of the broadcast signal, the total aircraft implementation loss is limited to 15 dB for horizontally polarized receiving antennas and 11 dB for vertically polarized receiving antennas.*

3.6.8.2.2.4 *VHF data broadcast time slot decoding*. The VHF data broadcast receiver shall meet the requirements of 3.6.8.2.2.3 for all Type 1, 2 and 4 messages from the selected GBAS ground subsystem. These requirements shall be met in the presence of other GBAS transmissions in any and all time slots respecting the levels as indicated in 3.6.8.2.2.5.1 b).

Note: *Other GBAS transmissions may include: a) messages other than Type 1, 2 and 4 with the same SSID, and b) messages with different SSIDs.*

3.6.8.2.2.4.1 *Decoding of Type 101 messages*. A VHF data broadcast receiver capable of receiving Type 101 messages, shall meet the requirements of 3.6.8.2.2.3 for all Type 101 messages from the selected GBAS ground subsystem. These requirements shall be met in the presence of other GBAS transmissions in any and all time slots respecting the levels as indicated in 3.6.8.2.2.5.1 b).

3.6.8.2.2.5 *Co-channel rejection*

3.6.8.2.2.5.1 *VHF data broadcast as the undesired signal source*. The VHF data broadcast receiver shall meet the requirements specified in 3.6.8.2.2.3 in the presence of an undesired co-channel VHF data broadcast signal that is either:

a) assigned to the same time slot(s) and 26 dB below the desired VHF data broadcast signal power or lower; or

b) assigned different time slot(s) and whose power is up to 15 dBm at the receiver input.

3.6.8.2.2.5.2 *VOR as the undesired signal*. The VHF data broadcast receiver shall meet the requirements specified in 3.6.8.2.2.3 in the presence of an undesired co-channel VOR signal that is 26 dB below the desired VHF data broadcast signal power.

3.6.8.2.2.5.3 *ILS localizer as the undesired signal.* The VHF data broadcast receiver shall meet the requirements specified in 3.6.8.2.2.3 in the presence of an undesired co-channel ILS localizer signal that is 26 dB below the desired VHF data broadcast signal power at the receiver input.

3.6.8.2.2.6 *Adjacent channel rejection.* The level of ILS localizer or VOR undesired signals shall be measured as the power in the RF carrier.

Note: *Even though S_{max} is the maximum desired VHF data broadcast signal power, it is also used to limit the maximum adjacent channel undesired signal power at the receiver input.*

3.6.8.2.2.6.1 *First adjacent 25 kHz channels (±25 kHz).* The VHF data broadcast receiver shall meet the requirements specified in 3.6.8.2.2.3 in the presence of a undesired signal with power levels at the receiver input up to S_{max} offset by 25 kHz on either side of the desired channel that is either:

a) 18 dB above the desired signal power when the undesired signal is another VHF data broadcast signal assigned to the same time slot(s); or

b) equal in power when the undesired signal is VOR.

c) equal in power at the receiver input when the undesired signal is ILS localizer.

3.6.8.2.2.6.2 *Second adjacent 25 kHz channels (±50 kHz)*. The VHF data broadcast receiver shall meet the requirements specified in 3.6.8.2.2.3 in the presence of a undesired

signal with power levels at the receiver input up to S_{max} offset by 50 kHz on either side of the desired channel that is either:

a) 43 dB above the desired signal power when the undesired signal is another VHF data broadcast source assigned to the same time slot(s); or

b) 34 dB above the desired signal power when the undesired signal is VOR.

c) 34 dB above the desired signal power at the receiver input when the undesired signal is ILS localizer.

3.6.8.2.2.6.3 *Third up to thirty-ninth adjacent 25 kHz channels (±75 kHz to ±975 kHz)*. The VHF data broadcast receiver shall meet the requirements specified in 3.6.8.2.2.3 in the presence of a transmitted undesired signal with power levels at the receiver input up to S_{max} offset by 75 kHz to 975 kHz on either side of the desired channel that is either:

a) 46 dB above the desired signal power when the undesired signal is another VHF data broadcast signal assigned to the same time slot(s); or

b) 46 dB above the desired signal power when the undesired signal is VOR.

c) 46 dB above the desired signal power at the receiver input when the undesired signal is ILS localizer.

3.6.8.2.2.6.4 *Fortieth and beyond adjacent 25 kHz channels (±1 MHz or more)*. The VHF data broadcast receiver shall meet the requirements specified in 3.6.8.2.2.3 in the presence of an undesired signal offset by 1 MHz or more on either side of the desired channel that is either:

a) 46 dB above the desired signal power at the receiver input when the undesired signal with power levels at the receiver input up to Smax is another VHF data broadcast signal assigned to the same time slot(s); or

b) 46 + ΔP dB above the desired signal power at the receiver input when the undesired signal is a VOR with power levels at the receiver input up to Smax – ΔP dB and ΔP ranges from 0 to 14 dB; or

c) 46 + ΔP dB above the desired signal power at the receiver input when the undesired signal is an ILS localizer with power levels at the receiver input up to Smax – ΔP dB and ΔP ranges from 0 to 14 dB.

Note 1: *ΔP equals Smax minus the undesired signal power at the receiver input with the following two constraints. ΔP equals 0 dB when the undesired power reaches Smax. ΔP equals 14 dB when the undesired power is 14 dB or more below Smax.*

Note 2: *The requirements in items b) and c) accommodate a third order intermodulation between the undesired signal and the local oscillator in the first mixer of the RF front-end of the VDB receiver; it is similar to the FM intermodulation immunity in 3.6.8.2.2.8.3 where N1 is the undesired signal and N2 is the local oscillator.*

3.6.8.2.2.6.5 *Receiver recovery from short-term excess undesired signal power*. The VHF data broadcast receiver shall meet the requirements specified in 3.6.8.2.2.3 within 187.5 milliseconds (equivalent duration of three VDB slots) after encountering an adjacent channel interference signal (ILS localizer or VOR) whose power is above Smax for no more than 2.5 seconds and by no more than 9 dB at the receiver input.

Note 1: *This requirement supports brief excessive power received during ILS localizer and VOR overflight. The duration of the excess power is limited by the continuity of the operation, e.g. the opportunity to receive three Type 1 messages in every 3.5 second window (refer to 3.6.8.3.4.1) without excess power for GAST C. For GAST D, no excess power is allowed when the timeout is 1.5 seconds (refer to 3.6.8.3.4.3). A VDB undesired signal never exceeds the maximum allowed field strength of the desired VDB signal within the service volume.*

Note 2: *Figure 20 shows a graphical representation of the VDB receiver regions of operation in the presence of an undesired ILS localizer or VOR signal in the fortieth or beyond adjacent 25 kHz channel, as a function of D/U and undesired signal power.*

3.6.8.2.2.7 *Rejection of off-channel signals from sources inside the 108.000 – 117.975 MHz band.* With no on-channel VHF data broadcast signal present, the VHF data broadcast receiver shall not output data from an undesired VHF data broadcast signal on any other assignable channel.

3.6.8.2.2.8 *Rejection of signals from sources outside the 108.000 – 117.975 MHz band*

3.6.8.2.2.8.1 *VHF data broadcast interference immunity.* The VHF data broadcast receiver shall meet the requirements specified in 3.6.8.2.2.3 in the presence of one or more signals having the frequency and total interference levels specified in Table 79.

3.6.8.2.2.8.2 *Desensitization*. The VHF data broadcast receiver shall meet the requirements specified in 3.6.8.2.2.3 in the presence of VHF FM broadcast signals with signal levels shown in Tables 80 and B-81.

Table 79. Maximum levels of undesired signals

Frequency	Maximum level of undesired signals at the receiver input (dBm)
50 kHz up to 88 MHz	–13
88 MHz – 107.900 MHz	(see 3.6.8.2.2.8.2)
108.000 MHz – 117.975 MHz	excluded
118.000 MHz	–44
118.025 MHz	–41
118.050 MHz up to 1 660.5 MHz	–13

Notes:

1. *The relationship is linear between single adjacent points designated by the above frequencies.*
2. *These interference immunity requirements may not be adequate to ensure compatibility between VHF data broadcast receivers and VHF communication systems, particularly for aircraft that use the vertically polarized component of the VHF data broadcast. Without coordination between COM and NAV frequencies assignments or respect of a guard band at the top end of the 112 – 117.975 MHz band, the maximum levels quoted at the lowest COM VHF channels (118.000, 118.00833, 118.01666, 118.025, 118.03333, 118.04166, 118.05) may be exceeded at the input of the VDB receivers. In that case, some means to attenuate the COM signals at the input of the VDB receivers (e.g. antenna separation) will have to be implemented. The final compatibility will have to be assured when equipment is installed on the aircraft.*

Table 80. Desensitization frequency and power requirements that apply for VDB frequencies from 108.025 to 111.975 MHz

Frequency	Maximum level of undesired signals at the receiver input (dBm)
88 MHz ≤ f ≤ 102 MHz	15
104 MHz	10
106 MHz	5
107.9 MHz	–10
Notes: *1. The relationship is linear between single adjacent points designated by the above frequencies.* *2. This desensitization requirement is not applied for FM carriers above 107.7 MHz and VDB channels at 108.025 or 108.050 MHz.*	

Table 81. Desensitization frequency and power requirements that apply for VDB frequencies from 112.000 to 117.975 MHz

Frequency	Maximum level of undesired signals at the receiver input (dBm)
88 MHz ≤ f ≤ 104 MHz 106 MHz 10 107 MHz 107.9 MHz 0	15 10 5 0
Note: *The relationship is linear between single adjacent points designated by the above frequencies.*	

3.6.8.2.2.8.3 *VHF data broadcast FM intermodulation immunity*. The VHF data broadcast receiver shall meet the requirements specified in 3.6.8.2.2.3 in the presence of interference from two-signal, third-order intermodulation products of two VHF FM broadcast signals having levels in accordance with the following:

$$\mathbf{2N_1 + N_2 + 72 \leq 0}$$

for VHF FM sound broadcasting signals in the range 107.7 – 108.0 MHz and

$$2N_1 + N_2 + 3\left(24 - 20\log\frac{\Delta f}{0.4}\right) \leq 0$$

for VHF FM sound broadcasting signals below 107.7 MHz where the frequencies of the two VHF FM sound broadcasting signals produce, within the receiver, a two signal, third-order intermodulation product on the desired VDB frequency.

N_1 and N_2 are the levels (dBm) of the two VHF FM sound broadcasting signals at the VHF data broadcast receiver input.

Neither level shall exceed the desensitization criteria set forth in 3.6.8.2.2.8.2.

$\Delta f = 108.1 – f_1$, where f1 is the frequency of N1, the VHF FM sound broadcasting signal closer to 108.1 MHz.

Note: *The FM intermodulation immunity requirements are not applied to a VHF data broadcast channel operating below 108.1 MHz, hence frequencies below 108.1 MHz are not intended for general assignments.*

3.6.8.3 *AIRCRAFT FUNCTIONAL REQUIREMENTS*

3.6.8.3.1 *Conditions for use of data*

3.6.8.3.1.1 The receiver shall use data from a GBAS message only if the CRC of that message has been verified.

3.6.8.3.1.2 The receiver shall use message data only if the message block identifier is set to the bit pattern “1010 1010”.

3.6.8.3.1.2.1 *GBAS message processing capability.* The GBAS receiver shall at a minimum process GBAS message types in accordance with Table 82.

Table 82. Airborne equipment message type processing

Airborne equipment designed performance	Minimum message types processed
APV-I APV-II Category I	MT 1 or 101, MT 2 (including ADB 1 and 2 if provided) MT 1, MT 2 (including ADB 1 and 2 if provided), MT 4 MT 1, MT 2 (including ADB 1 if provided), MT 4

3.6.8.3.1.2.2 *Airborne processing for forward compatibility*

Note: *Provisions have been made to enable future expansion of the GBAS Standards to support new capabilities. New message types may be defined, new additional data blocks for message Type 2 may be defined and new data blocks defining reference paths for inclusion within message Type 4 may be defined. To facilitate these future expansions, all equipment should be designed to properly ignore all data types that are not recognized.*

3.6.8.3.1.2.2.1 *Processing of unknown message types.* The existence of messages unknown to the airborne receiver shall not prevent correct processing of the required messages.

3.6.8.3.1.2.2.2 *Processing of unknown Type 2 extended data blocks.* The existence of message Type 2 additional data blocks unknown to the airborne receiver shall not prevent correct processing of the required messages.

3.6.8.3.1.2.2.3 *Processing of unknown Type 4 data blocks.* The existence of message Type 4 data blocks unknown to the airborne receiver shall not prevent correct processing of the required messages.

Note: *While the current SARPs include only one definition of a data block for inclusion within a Type 4 message, future GBAS Standards may include other reference path definitions.*

3.6.8.3.1.3 The receiver shall use only ranging source measurement blocks with matching modified Z-counts.

3.6.8.3.1.4 If D_{max} is broadcast by the ground subsystem, the receiver shall only apply pseudo-range corrections when the distance to the GBAS reference point is less than D_{max}.

3.6.8.3.1.5 The receiver shall only apply pseudo-range corrections from the most recently received set of corrections for a given measurement type. If the number of measurement fields in the most recently received Type 1 or Type 101 message indicates that there are no measurement blocks, then the receiver shall not apply GBAS corrections for that measurement type.

3.6.8.3.1.6 The receiver shall exclude from the differential navigation solution any ranging sources for which σ_{pr_gnd} is set to the bit pattern “1111 1111”.

3.6.8.3.1.7 The receiver shall only use a ranging source in the differential navigation solution if the time of applicability indicated by the modified Z-count in the Type 1 or Type 101 message containing the ephemeris decorrelation parameter for that ranging source is less than 120 seconds old.

3.6.8.3.1.8 *Conditions for use of data to support Category I precision approach and APV*

3.6.8.3.1.8.1 During the final stages of a Category I or APV approach, the receiver shall use only measurement blocks from Type 1 or Type 101 messages that were received within the last 3.5 seconds.

3.6.8.3.1.8.2 The receiver shall use message data from a GBAS ground subsystem for Category I precision approach or APV guidance only if the GCID indicates 1, 2, 3 or 4 prior to initiating the final stages of an approach.

3.6.8.3.1.8.3 The receiver shall ignore any changes in GCID during the final stages of an approach.

3.6.8.3.1.8.4 The receiver shall not provide approach vertical guidance based on a particular FAS data block transmitted in a Type 4 message if the FASVAL received prior to initiating the final stages of the approach is set to “1111 1111”.

3.6.8.3.1.8.5 The receiver shall not provide approach guidance based on a particular FAS data block transmitted in a Type 4 message if the FASLAL received prior to initiating the final stages of the approach is set to “1111 1111”.

3.6.8.3.1.8.6 Changes in the values of FASLAL and FASVAL data transmitted in a Type 4 message during the final stages of an approach shall be ignored by the receiver.

3.6.8.3.1.8.7 The receiver shall use FAS data only if the FAS CRC for that data has been verified.

3.6.8.3.1.8.8 The receiver shall only use messages for which the GBAS ID (in the message block header) matches the GBAS ID in the header of the Type 4 message which contains the selected FAS data or the Type 2 message which contains the selected RSDS.

3.6.8.3.1.8.9 *Use of FAS data*

3.6.8.3.1.8.9.1 The receiver shall use the Type 4 messages to determine the FAS for precision approach.

3.6.8.3.1.8.9.2 The receiver shall use the Type 4 messages to determine the FAS for APV associated with a channel number between 20 001 and 39 999.

3.6.8.3.1.8.9.3 The receiver shall use the FAS held within the on-board database for APV associated with a channel number between 40 000 and 99 999.

3.6.8.3.1.8.10 When the GBAS ground subsystem does not broadcast the Type 4 message and the selected FAS data are available to the receiver from an airborne database, the receiver shall only use messages from the intended GBAS ground subsystem.

3.6.8.3.1.9 *Conditions for use of data to provide the GBAS positioning service*

3.6.8.3.1.9.1 The receiver shall only use measurement blocks from Type 1 messages that were received within the last 7.5 seconds.

3.6.8.3.1.9.2 The receiver shall only use measurement blocks from Type 101 messages that were received within the last 5 seconds.

3.6.8.3.1.9.3 The receiver shall only use message data if a Type 2 message containing additional data block 1 has been received and the RSDS parameter in this block indicates that the GBAS positioning service is provided.

3.6.8.3.1.9.4 The receiver shall only use messages for which the GBAS ID (in the message block header) matches the GBAS ID in the header of the Type 2 message which contains the selected RSDS.

3.6.8.3.2 *Integrity*

3.6.8.3.2.1 *Bounding of aircraft errors.* For each satellite used in the navigation solution, the receiver shall compute a $\sigma_{receiver}$ such that a normal distribution with zero mean and a standard deviation equal to $\sigma_{receiver}$ bounds the receiver contribution to the corrected pseudo-range error as follows:

$$\int_{y}^{\infty} f(x)\,dx \le Q\left(\frac{y}{\sigma}\right) \text{ for all } \frac{y}{\sigma} \ge 0 \text{ and}$$

$$\int_{-\infty}^{-y} f(x)\,dx \le Q\left(\frac{y}{\sigma}\right) \text{ for all } \frac{y}{\sigma} \ge 0$$

where

f(x) = probability density function of the residual aircraft pseudo-range error and

$$Q(x) = \frac{1}{\sqrt{2\pi}} \int_{x}^{\infty} e^{-\frac{t^2}{2}}\,dt\,.$$

3.6.8.3.2.2 *Use of GBAS integrity parameters*. The aircraft element shall compute and apply the vertical, lateral and horizontal protection levels described in 3.6.5.5 using the GBAS broadcast σ_{pr_gnd}, σ_N, h_0, $\sigma_{vert_iono_gradient}$, and B parameters as well as the σ_{pr_air} parameter. If a $B_{i,j}$ parameter is set to the bit pattern “1000 0000” indicating that the measurement is not available, the aircraft element shall assume that $B_{i,j}$ has a value of zero. For Category I precision approach and APV, the aircraft element shall verify that the computed vertical and lateral protection levels are smaller than the corresponding vertical and lateral alert limits defined in 3.6.5.6.

3.6.8.3.3 *Use of satellite ephemeris data*

3.6.8.3.3.1 *IOD check.* The receiver shall only use satellites for which the IOD broadcast by GBAS in the Type 1 or Type 101 message matches the core satellite constellation IOD for the clock and ephemeris data used by the receiver.

3.6.8.3.3.2 *CRC check*. The receiver shall compute the ephemeris CRC for each core satellite constellation's ranging source used in the position solution. The computed CRC shall be validated against the ephemeris CRC broadcast in the Type 1 or Type 101 messages within one second of receiving a new broadcast CRC. The receiver shall immediately cease using any satellite for which the computed and broadcast CRC values fail to match.

Note: *During initial acquisition of the VHF data broadcast, the receiver may incorporate a satellite into the position solution before receiving the broadcast ephemeris CRC for that satellite.*

3.6.8.3.3.3 *Ephemeris error position bounds*

3.6.8.3.3.3.1 *Ephemeris error position bounds for Category I precision approach and APV*. If the ground subsystem provides additional data block 1 in the Type 2 messages, the aircraft element shall compute the ephemeris error position bounds defined in 3.6.5.8.1 for each core satellite constellation's ranging source used in the position solution within 1s of receiving the necessary broadcast parameters. The aircraft element shall exclude from the position solution satellites for which the computed vertical or lateral ephemeris error position bounds (VEB_j or LEB_j) are larger than the corresponding vertical and lateral alert limits defined in 3.6.5.6.

Note: *During initial acquisition of the VHF data broadcast, the receiver may incorporate a satellite into the position solution before receiving the necessary broadcast parameters for that satellite to compute the ephemeris error position bounds.*

3.6.8.3.3.3.2 *Ephemeris error position bound for the GBAS positioning service*. The aircraft element shall compute and apply the horizontal ephemeris error position bound (HEB_j) defined in 3.6.5.8.2 for each core satellite constellation's ranging source used in the position solution.

3.6.8.3.4 *Message loss*

3.6.8.3.4.1 For Category I precision approach, the receiver shall provide an appropriate alert if no Type 1 or Type 101 message was received during the last 3.5 seconds.

3.6.8.3.4.2 For APV, the receiver shall provide an appropriate alert if no Type 1 and no Type 101 message was received during the last 3.5 seconds.

3.6.8.3.4.3 For the GBAS positioning service using Type 1 messages, the receiver shall provide an appropriate alert if no Type 1 message was received during the last 7.5 seconds.

3.6.8.3.4.4 For the GBAS positioning service using Type 101 messages, the receiver shall provide an appropriate alert if no Type 101 message was received during the last 5 seconds.

3.6.8.3.5 *Airborne pseudo-range measurements*

3.6.8.3.5.1 *Carrier smoothing for airborne equipment.* Airborne equipment shall utilize the standard 100-second carrier smoothing of code phase measurements defined in 3.6.5.1. During the first 100 seconds after filter start-up, the value of α shall be either:

a) a constant equal to the sample interval divided by 100 seconds; or

b) a variable quantity defined by the sample interval divided by the time in seconds since filter start-up.

3.7 RESISTANCE TO INTERFERENCE

3.7.1 PERFORMANCE OBJECTIVES

Note 1: *For unaugmented GPS and GLONASS receivers the resistance to interference is measured with respect to the following performance parameters:*

	GPS	***GLONASS***
Tracking error (1 sigma)	*0.36 m*	*0.8 m*

Note 2: *This tracking error neither includes contributions due to signal propagation such as multipath, tropospheric and ionospheric effects nor ephemeris and GPS and GLONASS satellite clock errors.*

Note 3: *For SBAS receivers, the resistance to interference is measured with respect to parameters specified in 3.5.8.2.1 and 3.5.8.4.1.*

Note 4: *For GBAS receivers, the resistance to interference is measured with respect to parameters specified in 3.6.7.1.1 and 3.6.8.2.1.*

Note 5: *The signal levels specified in this section are defined at the antenna port. Assumed maximum aircraft antenna gain in the lower hemisphere is –10 dBic.*

Note 6: *The performance requirements are to be met in the interference environments defined below. This defined interference environment is relaxed during initial acquisition of GNSS signals when the receiver cannot take advantage of a steady-state navigation solution to aid signal acquisition.*

3.7.2 CONTINUOUS WAVE (CW) INTERFERENCE

3.7.2.1 *GPS AND SBAS RECEIVERS*

3.7.2.1.1 After steady-state navigation has been established, GPS and SBAS receivers shall meet the performance objectives with CW interfering signals present with a power level at the antenna port equal to the interference thresholds specified in Table 83 and shown in Figure 15 and with a desired signal level of –164 dBW at the antenna port.

3.7.2.1.2 During initial acquisition of the GPS and SBAS signals prior to steady-state navigation, GPS and SBAS receivers shall meet the performance objectives with interference thresholds 6 dB less than those specified in Table 83.

3.7.2.2 *GLONASS RECEIVERS*

3.7.2.2.1 After steady-state navigation has been established, GLONASS receivers (except those identified in 3.7.2.2.1.1) shall meet the performance objectives with CW interfering signals present with a power level at the antenna port equal to the interference thresholds specified in Table 84 and shown in Figure16 and with a desired signal level –166.5 dBW at the antenna port.

Table 83. CW interference thresholds for GPS and SBAS receivers in steady-state navigation

Frequency range fi of the interference signal	Interference thresholds for receivers in steady-state navigation
$f_i \leq 1\,315$ MHz	–4.5 dBW
1 315 MHz < $f_i \leq 1\,500$ MHz	Linearly decreasing from –4.5 dBW to –38 dBW
1 500 MHz < $f_i \leq 1\,525$ MHz	Linearly decreasing from –38 dBW to –42 dBW
1 525 MHz < $f_i \leq 1\,565.42$ MHz	Linearly decreasing from –42 dBW to –150.5 dBW
1 565.42 MHz < $f_i \leq 1\,585.42$ MHz	–150.5 dBW
1 585.42 MHz < $f_i \leq 1\,610$ MHz	Linearly increasing from –150.5 dBW to –60 dBW
1 610 MHz < $f_i \leq 1\,618$ MHz	Linearly increasing from –60 dBW to –42 dBW*
1 618 MHz < $f_i \leq 2\,000$ MHz	Linearly increasing from –42 dBW to –8.5 dBW*
1 610 MHz < $f_i \leq 1\,626.5$ MHz	Linearly increasing from –60 dBW to –22 dBW**
1 626.5 MHz < $f_i \leq 2\,000$ MHz	Linearly increasing from –22 dBW to –8.5 dBW**
$f_i > 2\,000$ MHz	–8.5 dBW

* Applies to aircraft installations where there are no on-board satellite communications.
** Applies to aircraft installations where there is on-board satellite communications.

3.7.2.2.1.1 After steady-state navigation has been established, GLONASS receivers used for all phases of flight (excluding those used for the precision approach phase of flight) and put into operation before 1 January 2017 shall meet the performance objectives with CW interfering signals present with a power level at the antenna port 3 dB less than the interference thresholds specified in Table 84 and shown in Figure16 and with a desired signal level of –166.5 dBW at the antenna port.

Table 84. CW interference thresholds for GLONASS receivers in steady-state navigation

Frequency range f_i of the interference signal	Interference thresholds for receivers in steady-state navigation
fi ≤ 1 315 MHz	–4.5 dBW
1 315 MHz < fi ≤ 1 562.15625 MHz	Linearly decreasing from –4.5 dBW to –42 dBW
1 562.15625 MHz < fi ≤ 1 583.65625 MHz	Linearly decreasing from –42 dBW to –80 dBW
1 583.65625 MHz < fi ≤ 1 592.9525 MHz	Linearly decreasing from –80 dBW to –149 dBW
1 592.9525 MHz < fi ≤ 1 609.36 MHz	–149 dBW
1 609.36 MHz < fi ≤ 1 613.65625 MHz	Linearly increasing from –149 dBW to –80 dBW
1 613.65625 MHz < fi ≤ 1 635.15625 MHz	Linearly increasing from –80 dBW to –42 dBW*
1 613.65625 MHz < fi ≤ 1 626.15625 MHz	Linearly increasing from –80 dBW to –22 dBW**
1 635.15625 MHz < fi ≤ 2 000 MHz	Linearly increasing from –42 dBW to –8.5 dBW*
1 626.15625 MHz < fi ≤ 2 000 MHz	Linearly increasing from –22 dBW to –8.5 dBW**
fi > 2 000 MHz	–8.5 dBW

* Applies to aircraft installations where there are no on-board satellite communications.
** Applies to aircraft installations where there is on-board satellite communications.

3.7.2.2.2 During initial acquisition of the GLONASS signals prior to steady-state navigation, GLONASS receivers shall meet the performance objectives with interference thresholds 6 dB less than those specified in Table 84.

3.7.3 BAND-LIMITED NOISE-LIKE INTERFERENCE

3.7.3.1 *GPS AND SBAS RECEIVERS*

3.7.3.1.1 After steady-state navigation has been established, GPS and SBAS receivers shall meet the performance objectives with noise-like interfering signals present in the frequency range of 1 575.42 MHz ±Bwi/2 and with power levels at the antenna port equal to the interference thresholds specified in Table 85 and shown in Figure 17 and with the desired signal level of –164 dBW at the antenna port.

Note: *Bw_i is the equivalent noise bandwidth of the interference signal.*

3.7.3.1.2 During initial acquisition of the GPS and SBAS signals prior to steady-state navigation, GPS and SBAS receivers shall meet the performance objectives with interference thresholds 6 dB less than those specified in Table 85.

3.7.3.2 *GLONASS RECEIVERS*

3.7.3.2.1 After steady-state navigation has been established, GLONASS receivers (except those identified in 3.7.3.2.1.1) shall meet the performance objectives while receiving noise-like interfering signals in the frequency band fk ±Bwi/2, with power levels at the antenna port equal to the interference thresholds specified in Table 86 and shown in Figure 18 and with a desired signal level of –166.5 dBW at the antenna port.

3.7.3.2.1.1 After steady-state navigation has been established, GLONASS receivers used for all phases of flight (excluding those used for the precision approach phase of flight) and put into operation before 1 January 2017 shall meet the performance objectives while receiving noise-like interfering signals in the frequency band fk ±Bwi/2, with power levels at the antenna port 3 dB less than the interference thresholds specified in Table 86 and shown in Figure18 and with a desired signal level of –166.5 dBW at the antenna port.

Note: *fk is the centre frequency of a GLONASS channel with fk = 1 602 MHz + k × 0.5625 MHz and k = –7 to + 6 as defined in Table 16 and Bwi is the equivalent noise bandwidth of the interference signal.*

3.7.3.2.2 During initial acquisition of the GLONASS signals prior to steady-state navigation, GLONASS receivers shall meet the performance objectives with interference thresholds 6 dB less than those specified in Table 86.

3.7.3.3 *Pulsed interference*. After steady-state navigation has been established, the receiver shall meet the performance objectives while receiving pulsed interference signals with characteristics according to Table 87 where the interference threshold is defined at the antenna port.

3.7.3.4 SBAS and GBAS receivers shall not output misleading information in the presence of interference including interference levels above those specified in 3.7.

Note: *Material on this requirement is contained in GM on application GNSS standards and recommended practices, 10.5.*

3.8 GNSS AIRCRAFT SATELLITE RECEIVER ANTENNA

3.8.1 *Antenna coverage*. The GNSS antenna shall meet the performance requirements for the reception of GNSS satellite signals from 0 to 360 degrees in azimuth and from 0 to 90 degrees in elevation relative to the horizontal plane of an aircraft in level flight.

3.8.2 *Antenna gain.* The minimum antenna gain shall not be less than that shown in Table 88 for the specified elevation angle above the horizon. The maximum antenna gain shall not exceed +4 dBic for elevation angles above 5 degrees.

3.8.3 *Polarization*. The GNSS antenna polarization shall be right-hand circular (clockwise with respect to the direction of propagation).

3.8.3.1 The antenna axial ratio shall not exceed 3.0 dB as measured at boresight.

3.9 CYCLIC REDUNDANCY CHECK

Each CRC shall be calculated as the remainder, R(x), of the Modulo-2 division of two binary polynomials as follows:

$$\left\{\frac{[x^k M(x)]}{G(x)}\right\}_{\text{mod } 2} = Q(x) + \frac{R(x)}{G(x)}$$

where

k = the number of bits in the particular CRC;

M(x) = the information field, which consists of the data items to be protected by the particular CRC represented as a polynomial;

G(x) = the generator polynomial specified for the particular CRC;

Q(x) = the quotient of the division; and

R(x) = the remainder of the division, contains the CRC:

$$R(x) = \sum_{i=1}^{k} r_i x^{k-i} = r_1 x^{k-1} + r_2 x^{k-2} + \ldots + r_k x^0$$

Table 85. Interference threshold for band-limited noise-like interference to GPS and SBAS receivers in steady-state navigation

Interference bandwidth	Interference threshold for receivers in steady-state navigation
0 Hz < Bwi ≤ 700 Hz	–150.5 dBW
700 Hz < Bwi ≤ 10 kHz	Linearly increasing from –150.5 to –143.5 dBW
10 kHz < Bwi ≤ 100 kHz	Linearly increasing from –143.5 to –140.5 dBW
100 kHz < Bwi ≤ 1 MHz	–140.5 dBW
1 MHz < Bwi ≤ 20 MHz	Linearly increasing from –140.5 to –127.5 dBW*
20 MHz < Bwi ≤ 30 MHz	Linearly increasing from –127.5 to –121.1 dBW*
30 MHz < Bwi ≤ 40 MHz	Linearly increasing from –121.1 to –119.5 dBW*
40 MHz < Bwi	–119.5 dBW*

* The interference threshold is not to exceed –140.5 dBW/MHz in the frequency range 1 575.42 ±10 MHz.

Table 86. Interference threshold for band-limited noise-like interference to GLONASS receivers in steady-state navigation

Interference bandwidth	Interference threshold
0 Hz < Bwi ≤ 1 kHz	–149 dBW
1 kHz < Bwi ≤ 10 kHz	Linearly increasing from –149 to –143 dBW
10 kHz < Bwi ≤ 0.5 MHz	–143 dBW
0.5 MHz < Bwi ≤ 10 MHz	Linearly increasing from –143 to –130 dBW
10 MHz < Bwi	–130 dBW

Table 87. Interference thresholds for pulsed interference

	GPS and SBAS	GLONASS
Frequency range for in-band and near-band	1 575.42 MHz ± 20 MHz	1 592.9525 MHz to 1 609.36 MHz
Interference threshold (Pulse peak power) for in-band and near-band interference	–20 dBW	–20 dBW
Interference threshold (Pulse peak power) outside the in-band and near-band frequency ranges (out-of-band interference)	0 dBW	0 dBW
Pulse width	≤125 μs	≤250 μs
Pulse duty cycle	≤1%	≤1%
Interference signal bandwidth for in-band and near-band interference	≥1 MHz	≥500 kHz

Note 1: *The interference signal is additive white Gaussian noise centred around the carrier frequency and with bandwidth and pulse characteristics specified in the table.*

Note 2: *In-band, near-band and out-of-band interference refers to the centre frequency of the interference signal.*

Table 88. Minimum antenna gain — GPS, GLONASS and SBAS

Elevation angle degrees	Minimum gain dBic
0	–7
5	–5.5
10	–4
15 to 90	–2.5

Note: *The –5.5 dBic gain at 5 degrees elevation angle is appropriate for an L1 antenna. A higher gain may be required in the future for GNSS signals in the L5/E5 band.*

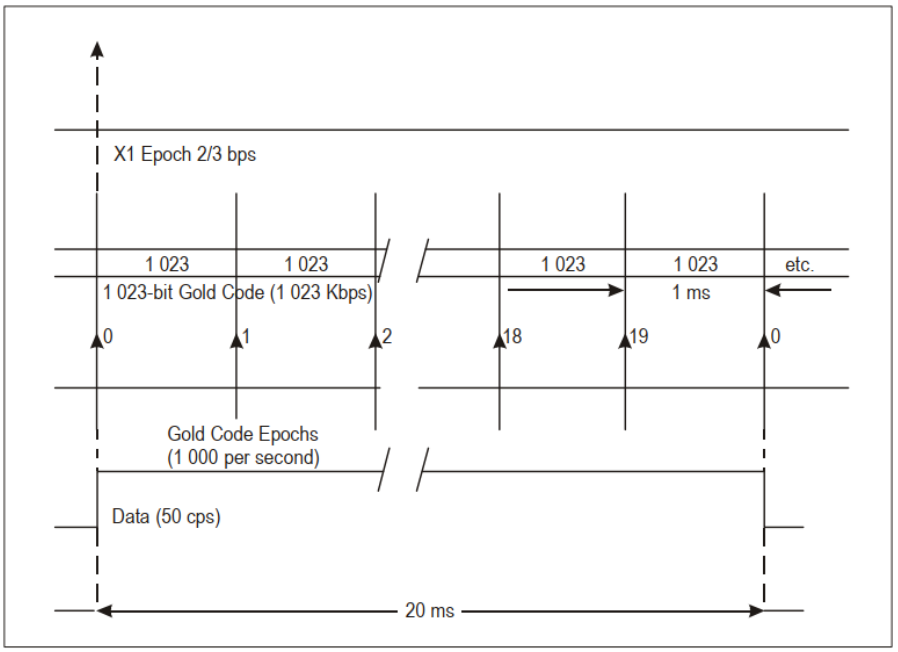

Figure 1. C/A code timing relationships

SUBFRAME 1	TLM	HOW	GPS week number, SV accuracy and health
SUBFRAME 2	TLM	HOW	Ephemeris parameters
SUBFRAME 3	TLM	HOW	Ephemeris parameters
SUBFRAME 4 (25 pages)	TLM	HOW	Almanac and health for satellites 25–32, special messages, satellite configuration, flags, ionospheric and UTC
SUBFRAME 5 (25 pages)	TLM	HOW	Almanac and health for satellites 1–24 and almanac reference time and GPS week number

Figure 2. Frame structure

Preamble								Reserved																Parity					
1	0	0	0	1	0	1	1	MSB															LSB						
1	2	3	4	5	6	7	8	9	10	11	12	13	14	15	16	17	18	19	20	21	22	23	24	25	26	27	28	29	30

Figure 3. TLM word format

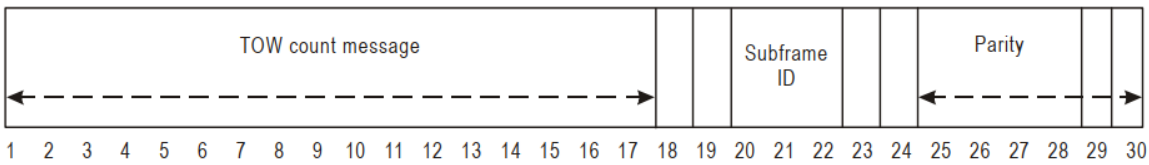

Figure 4. HOW format

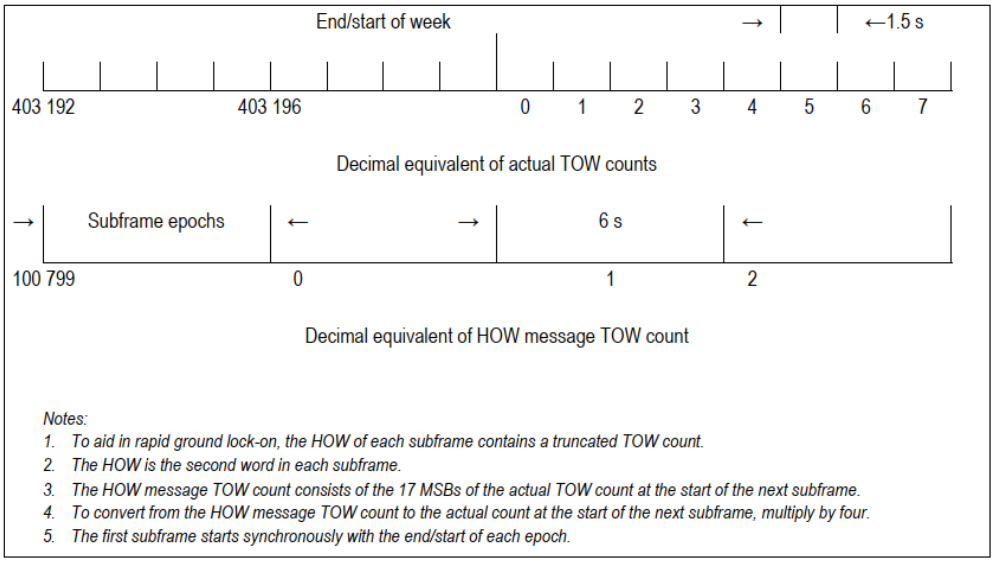

Figure 5. Time line relationship of HOW

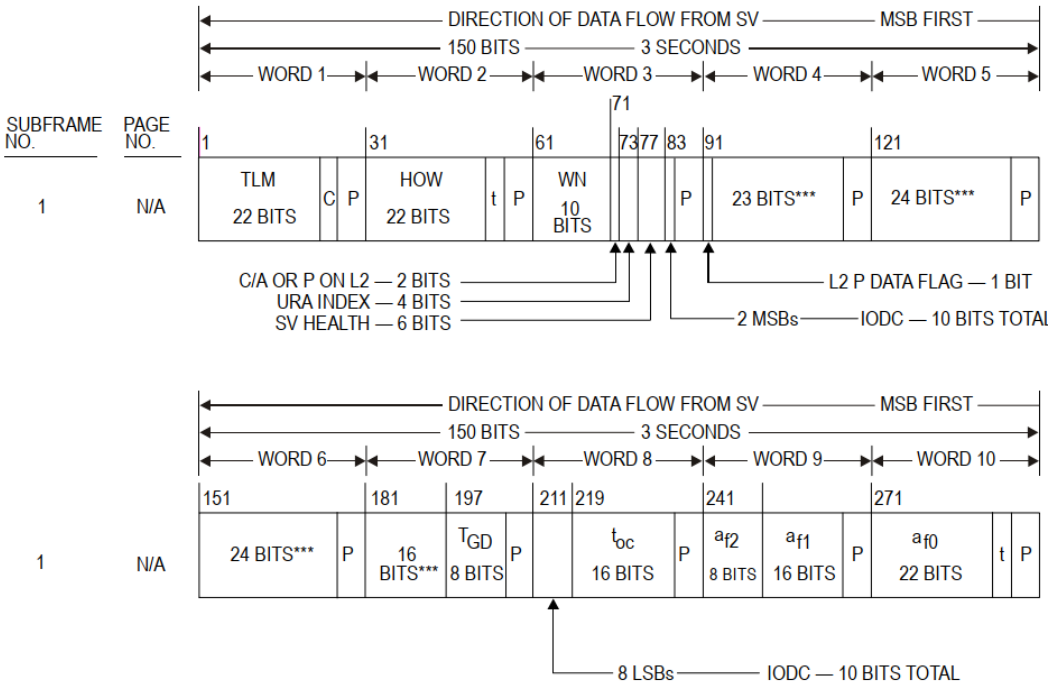

*** RESERVED
P = 6 PARITY BITS
t = 2 NON-INFORMATION BEARING BITS USED FOR PARITY COMPUTATION
C = TLM BITS 23 AND 24 WHICH ARE RESERVED

Figure 6. Data format (1 of 11)

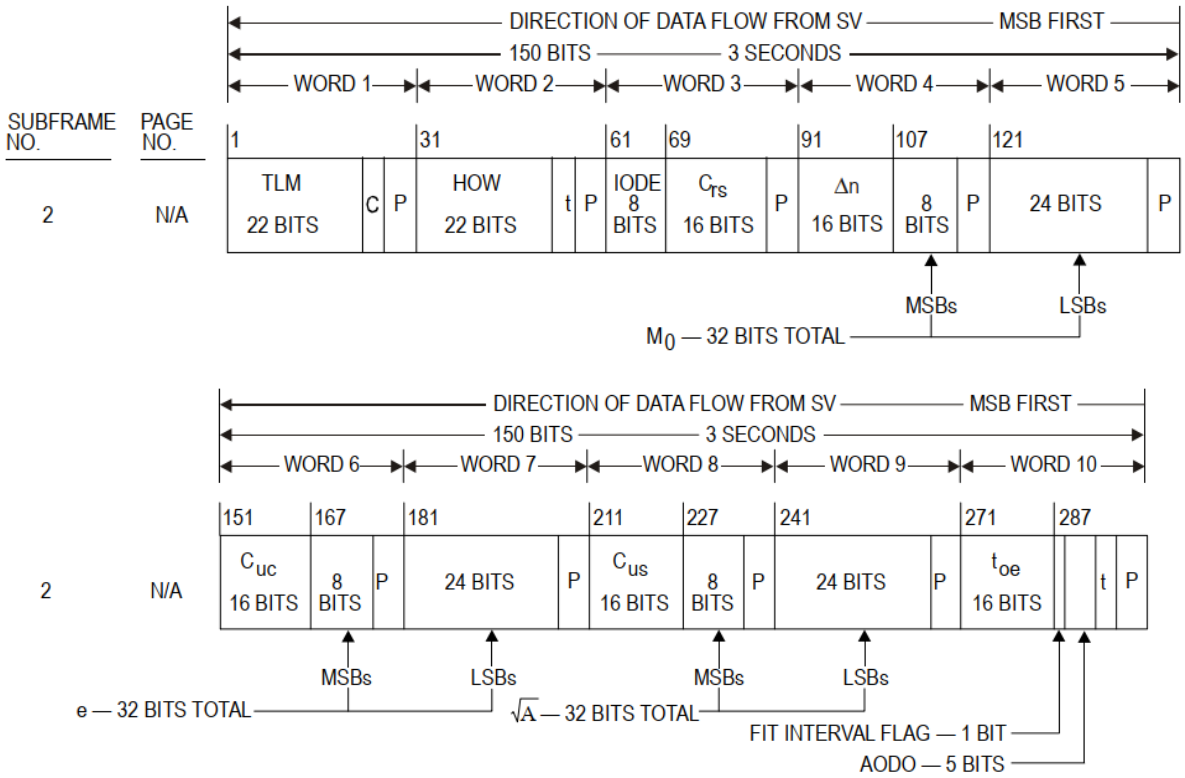

Figure 6. Data format (2 of 11)

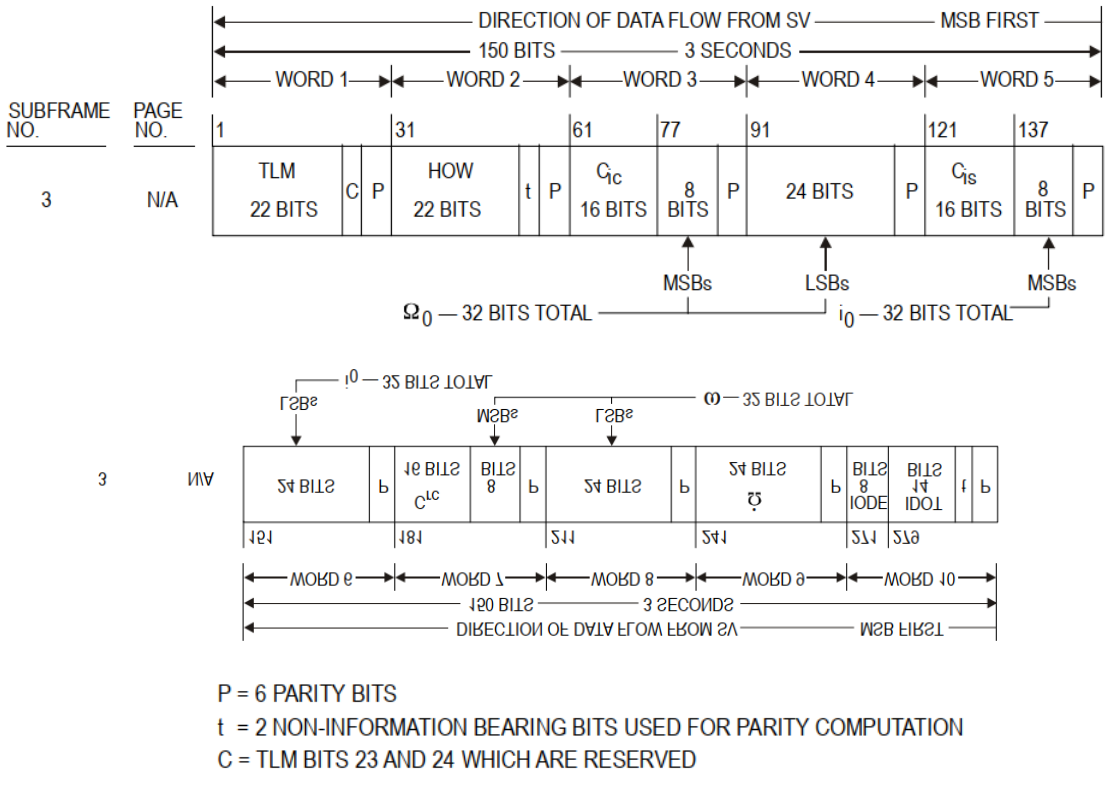

Figure 6. Data format (3 of 11)

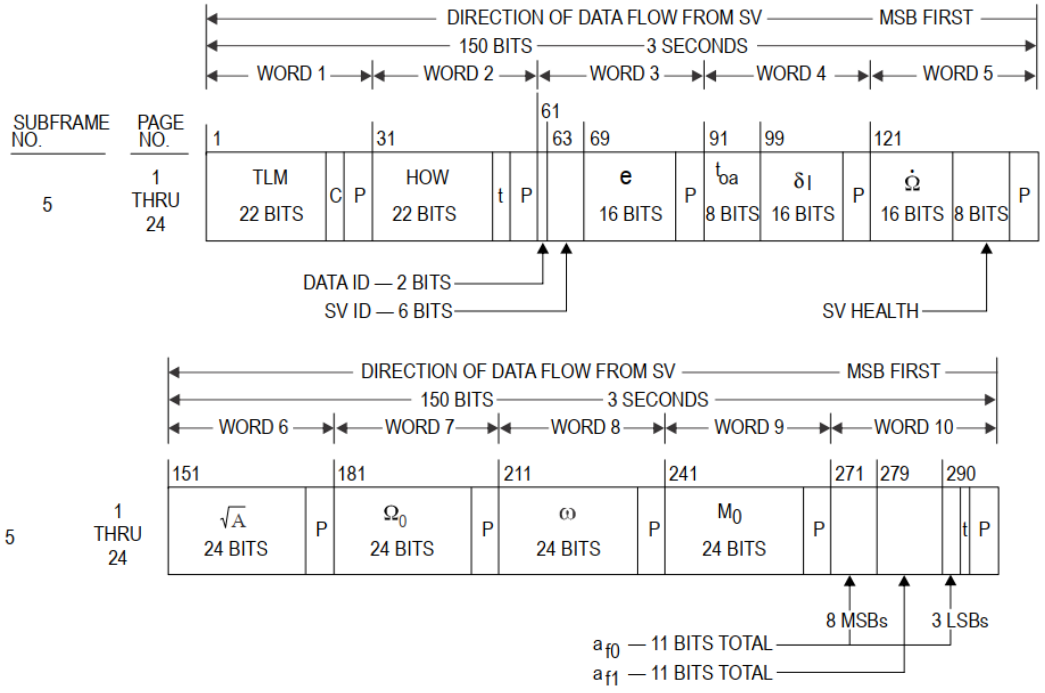

P = 6 PARITY BITS
t = 2 NON-INFORMATION BEARING BITS USED FOR PARITY COMPUTATION
C = TLM BITS 23 AND 24 WHICH ARE RESERVED
Note.— Pages 2, 3, 4, 5, 7, 8, 9 and 10 of subframe 4 have the same format as pages 1 through 24 of subframe 5.

Figure 6. Data format (4 of 11)

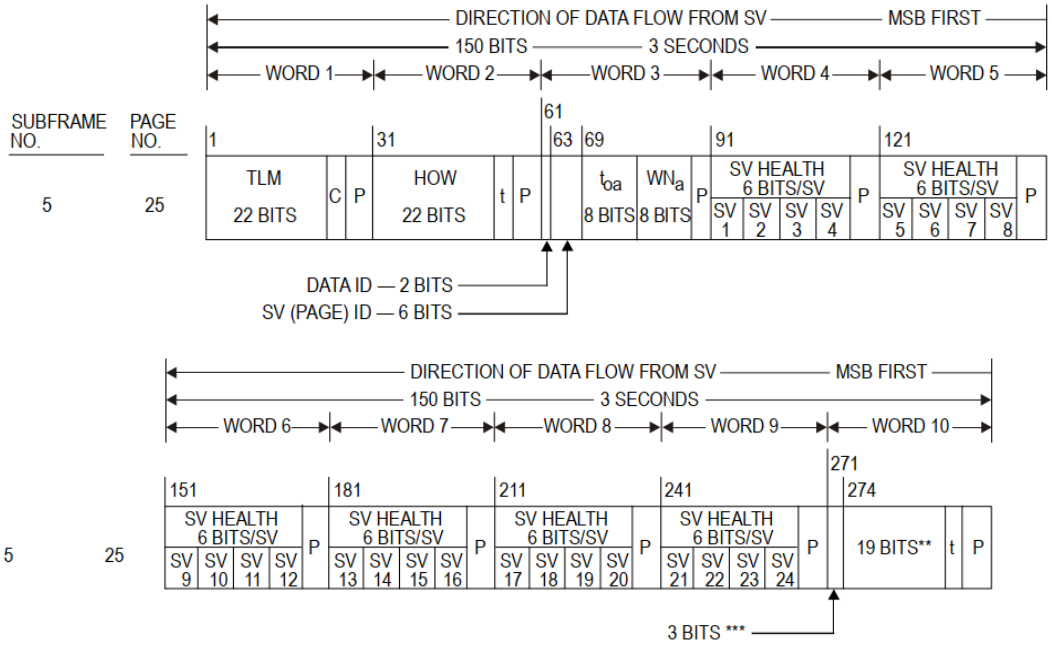

** RESERVED FOR SYSTEM USE
*** RESERVED
P = 6 PARITY BITS
t = 2 NON-INFORMATION BEARING BITS USED FOR PARITY COMPUTATION
C = TLM BITS 23 AND 24 WHICH ARE RESERVED

Figure 6. Data format (5 of 11)

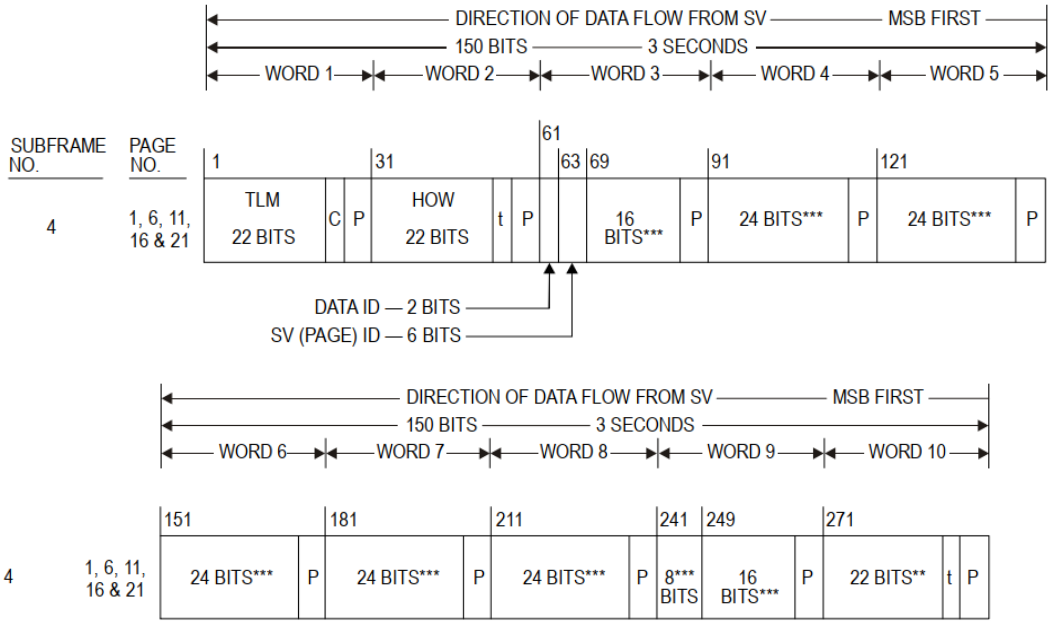

** RESERVED FOR SYSTEM USE
*** RESERVED
P = 6 PARITY BITS
t = 2 NON-INFORMATION BEARING BITS USED FOR PARITY COMPUTATION
C = TLM BITS 23 AND 24 WHICH ARE RESERVED

Figure 6. Data format (6 of 11)

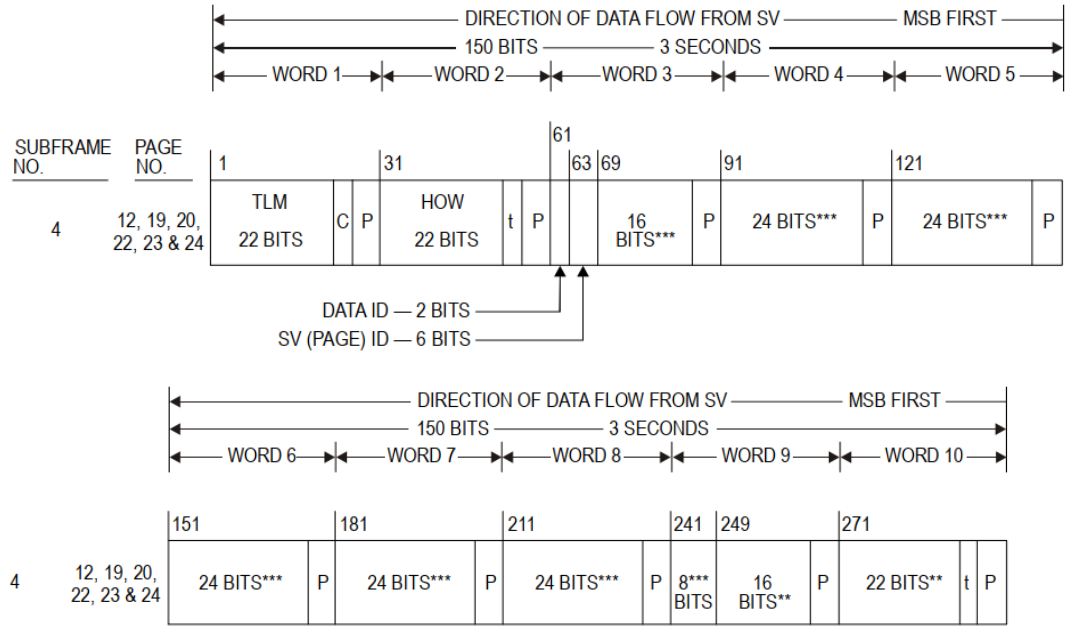

** RESERVED FOR SYSTEM USE
*** RESERVED
P = 6 PARITY BITS
t = 2 NON-INFORMATION BEARING BITS USED FOR PARITY COMPUTATION
C = TLM BITS 23 AND 24 WHICH ARE RESERVED

Figure 6. Data format (7 of 11)

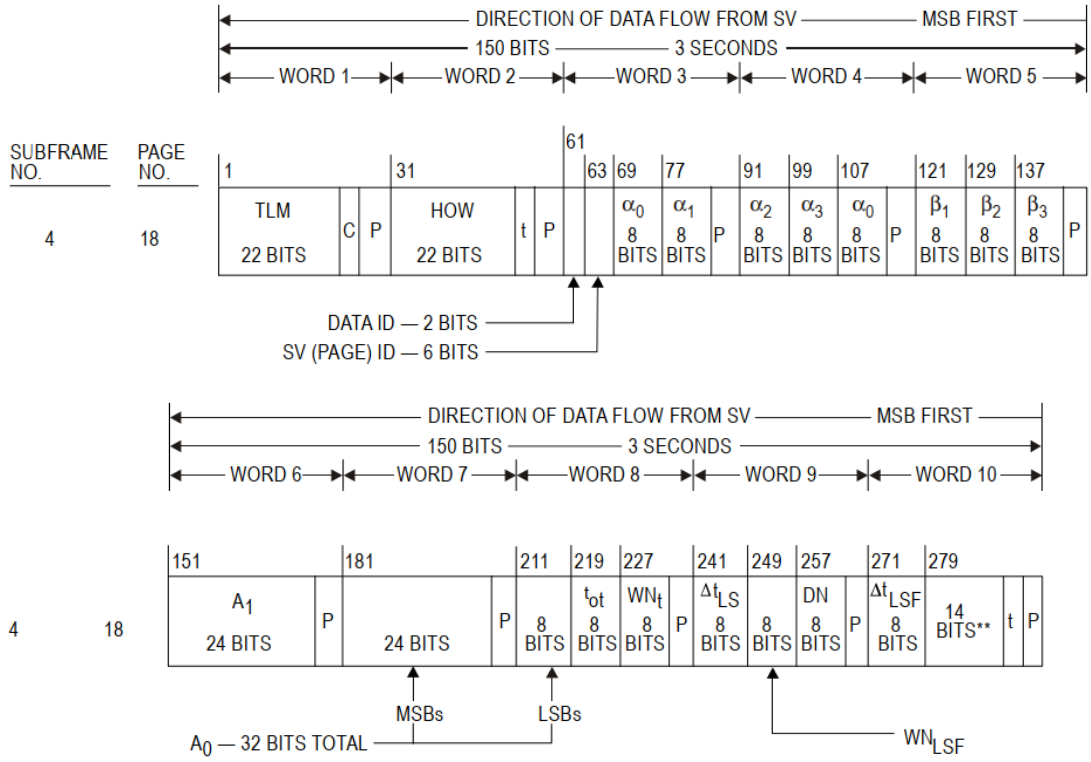

** RESERVED FOR SYSTEM USE
P = 6 PARITY BITS
t = 2 NON-INFORMATION BEARING BITS USED FOR PARITY COMPUTATION
C = TLM BITS 23 AND 24 WHICH ARE RESERVED

Figure 6. Data format (8 of 11)

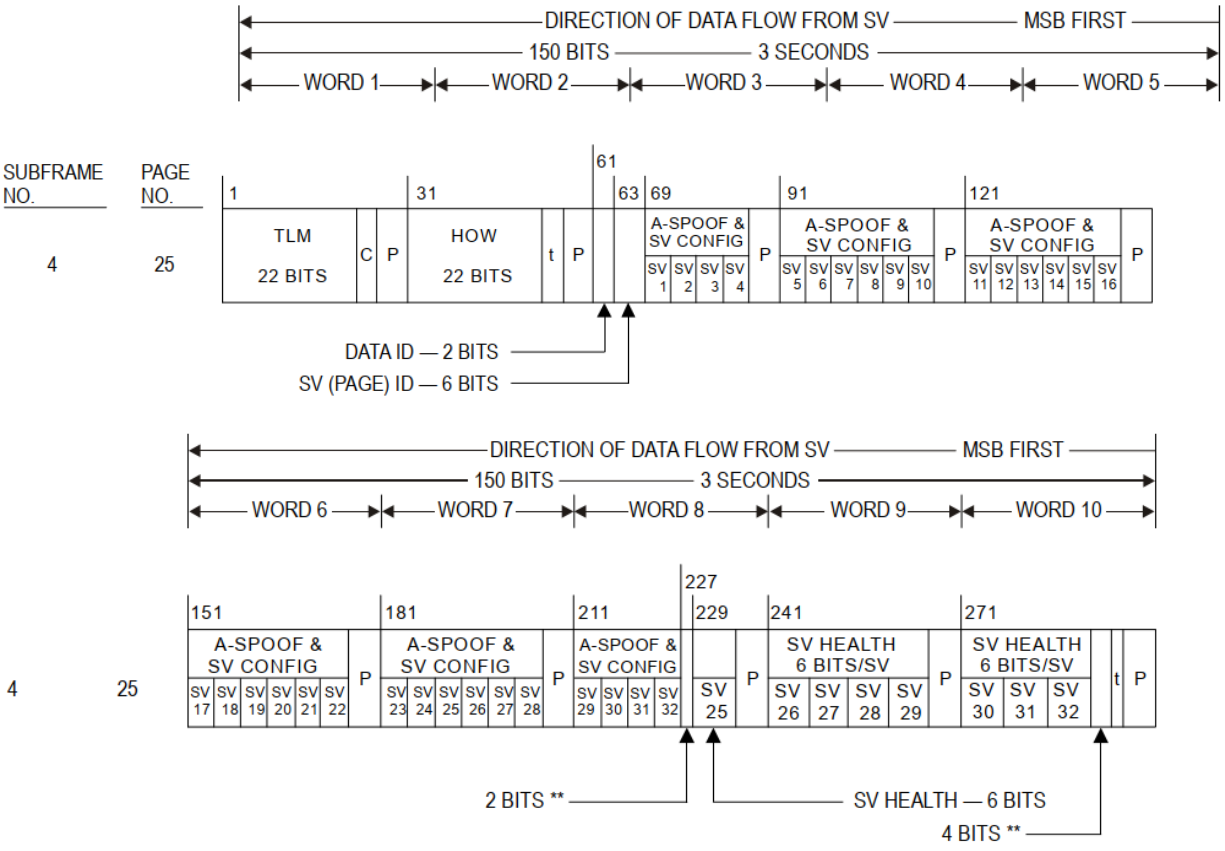

** RESERVED FOR SYSTEM USE
P = 6 PARITY BITS
t = 2 NON-INFORMATION BEARING BITS USED FOR PARITY COMPUTATION
C = TLM BITS 23 AND 24 WHICH ARE RESERVED

Figure 6. Data format (9 of 11)

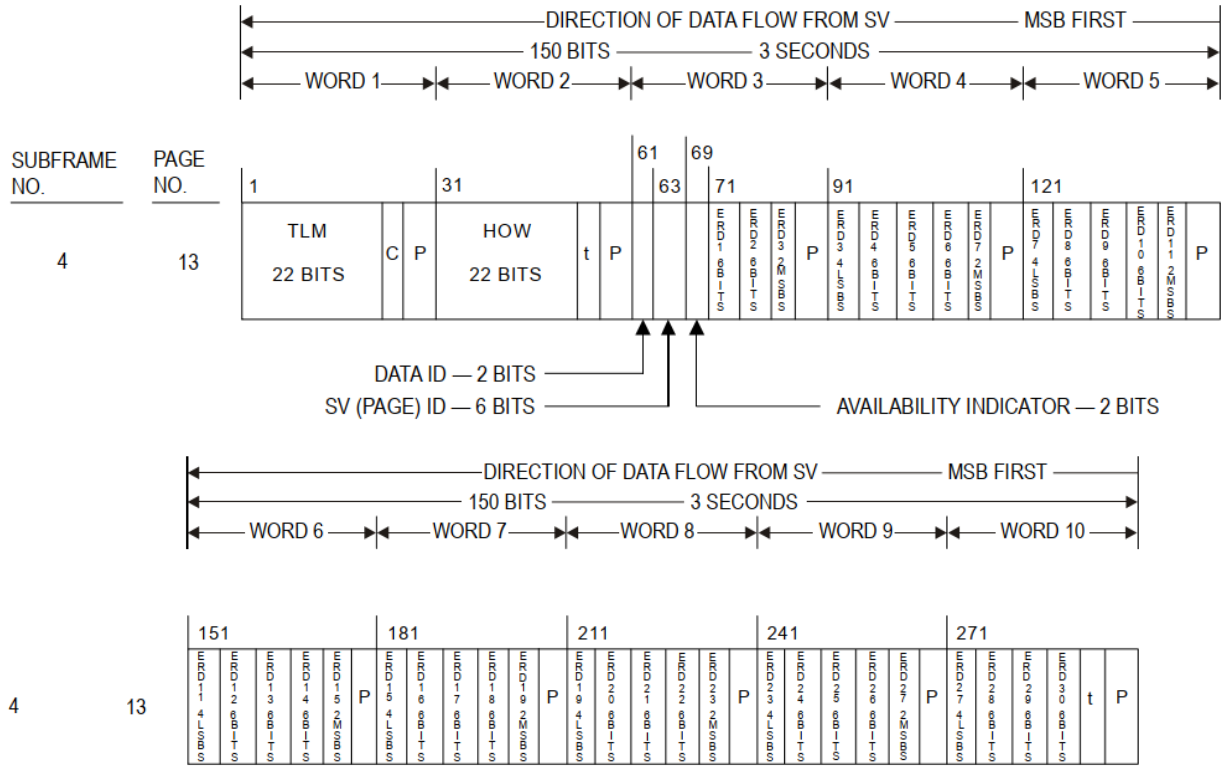

P = 6 PARITY BITS
t = 2 NON-INFORMATION BEARING BITS USED FOR PARITY COMPUTATION
C = TLM BITS 23 AND 24 WHICH ARE RESERVED

Figure 6. Data format (10 of 11)

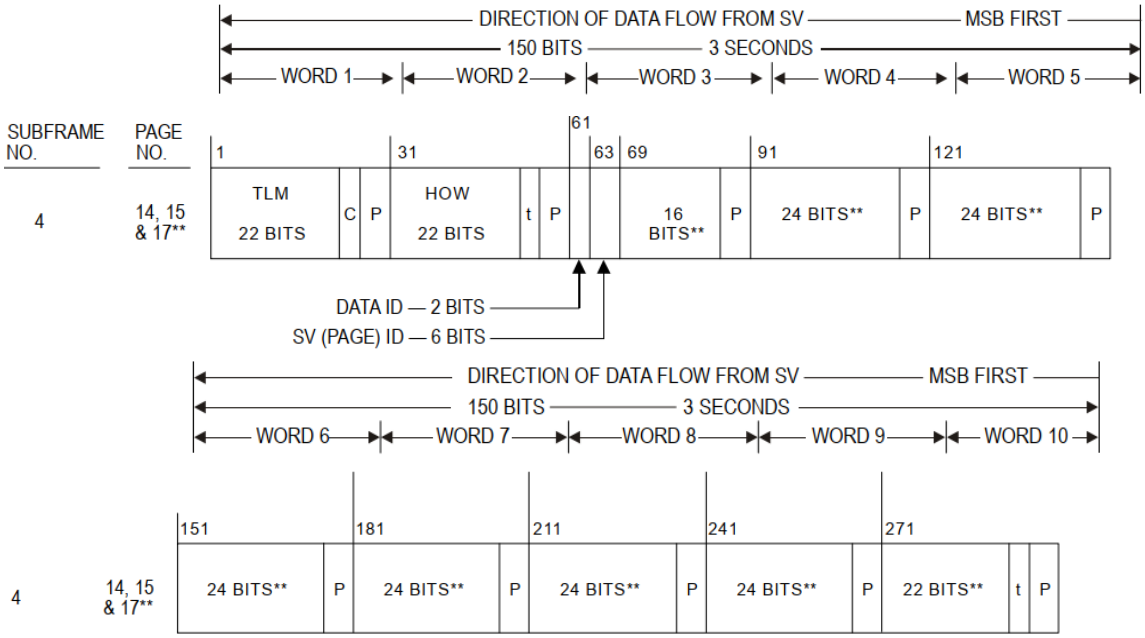

** THE INDICATED PORTIONS OF WORDS 3 THROUGH 10 OF PAGES 14 AND 15 ARE RESERVED FOR SYSTEM USE, WHILE THOSE OF PAGE 17 ARE RESERVED FOR SPECIAL MESSAGES

P = 6 PARITY BITS
t = 2 NON-INFORMATION BEARING BITS USED FOR PARITY COMPUTATION
C = TLM BITS 23 AND 24 WHICH ARE RESERVED

Figure 6. Data format (11 of 11)

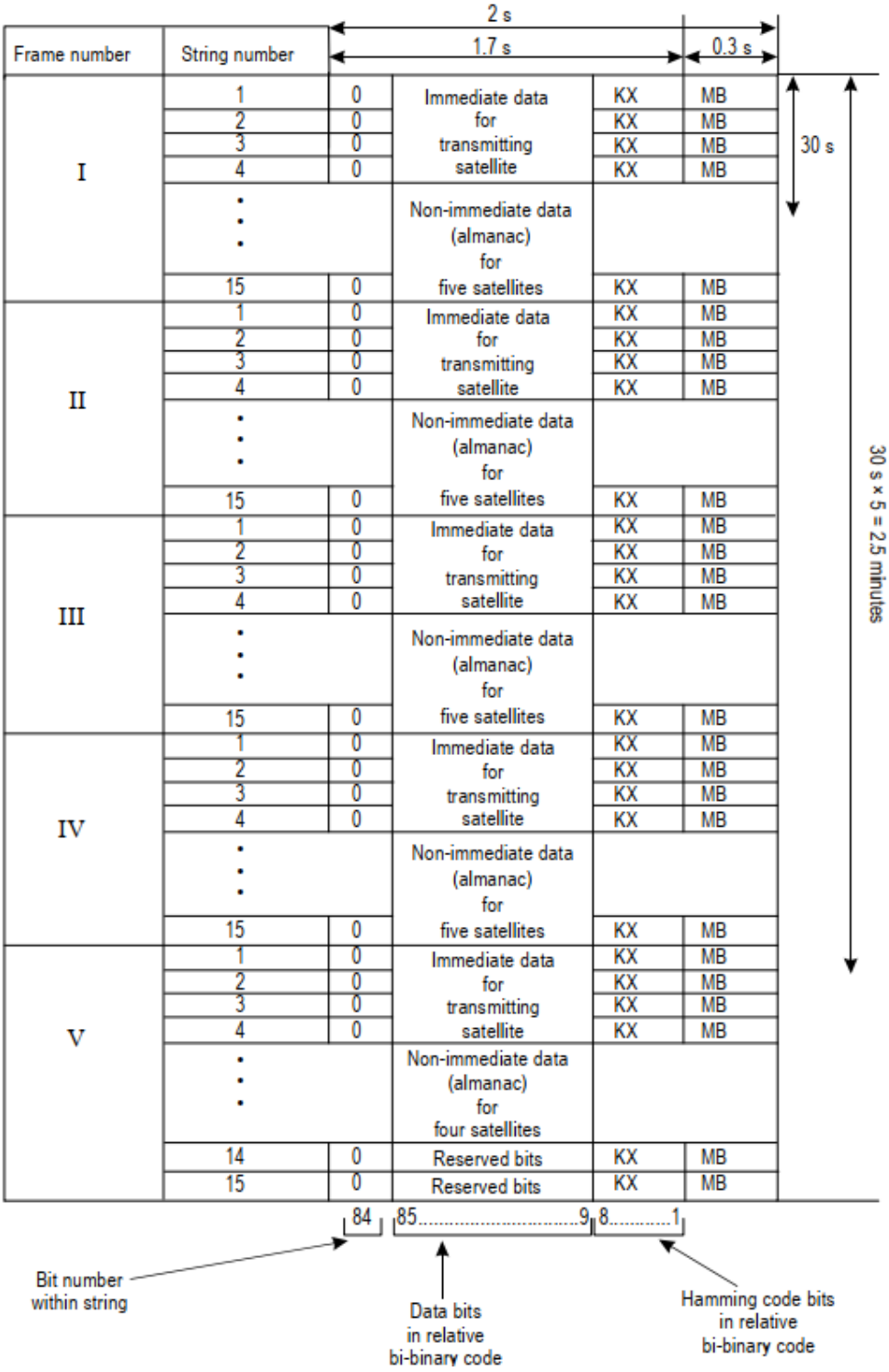

Figure 7. Superframe structure

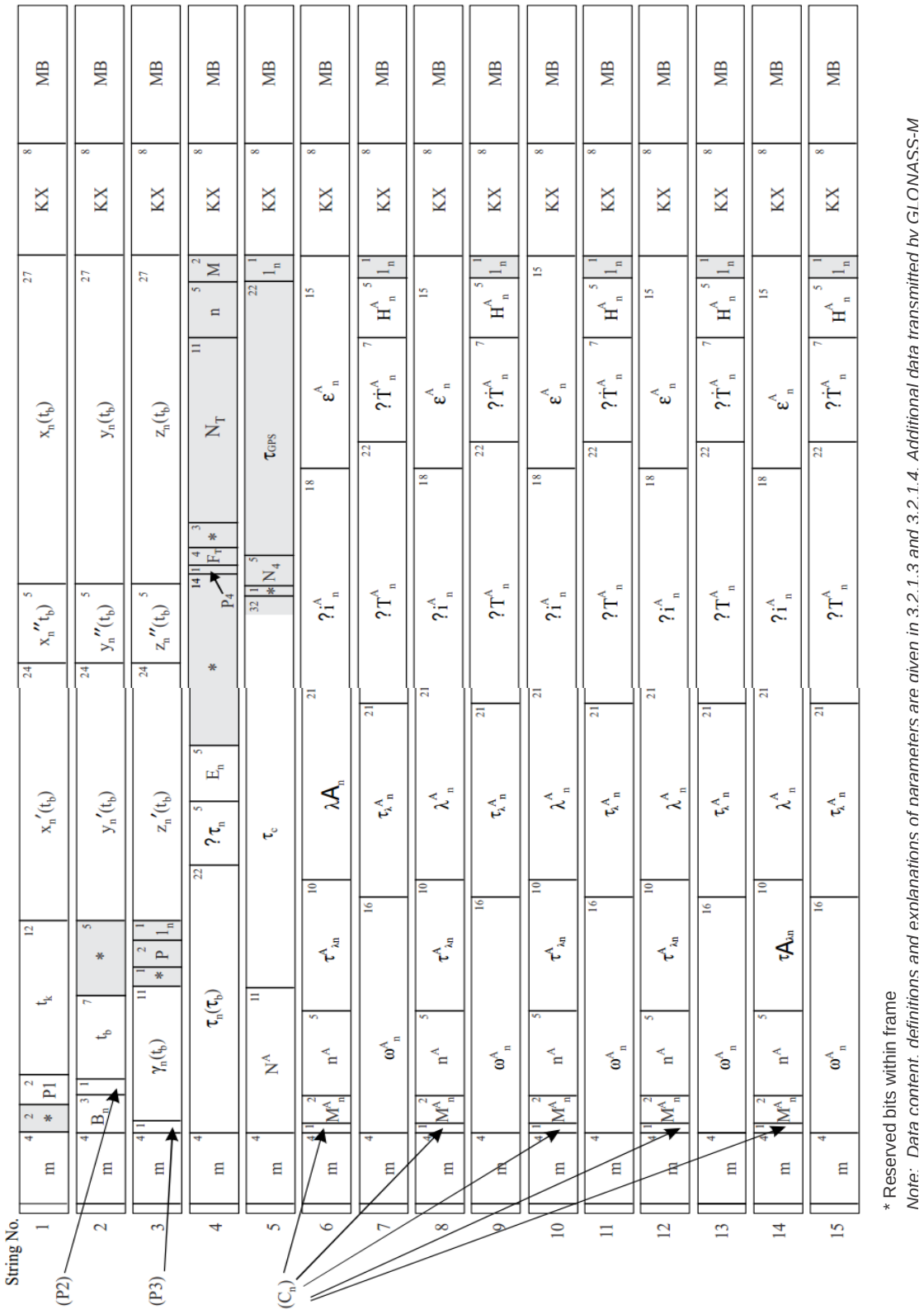

Figure 8. Frames structure (Frames 1-4)

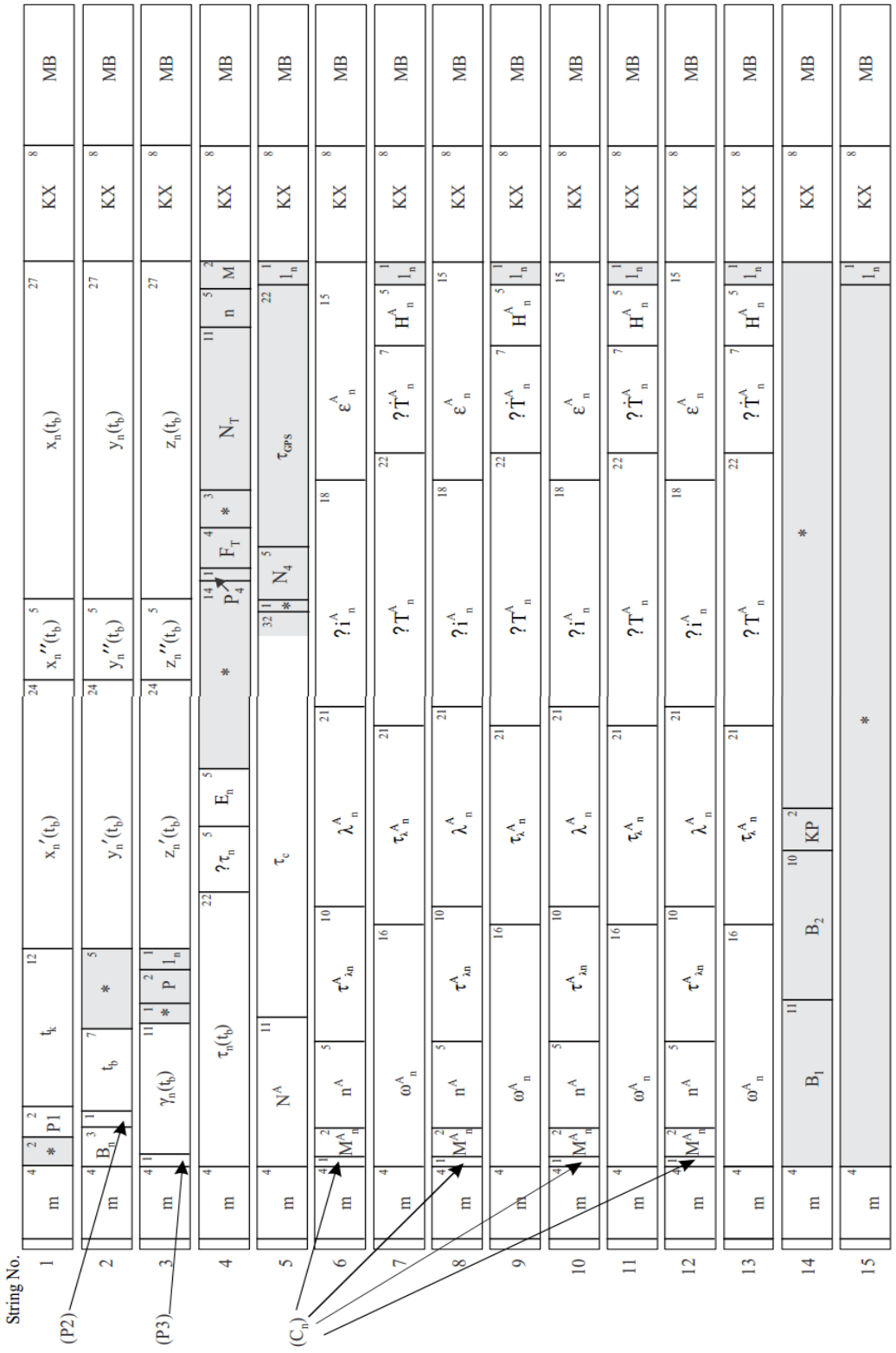

Figure-9. Frame structure (Frame 5)

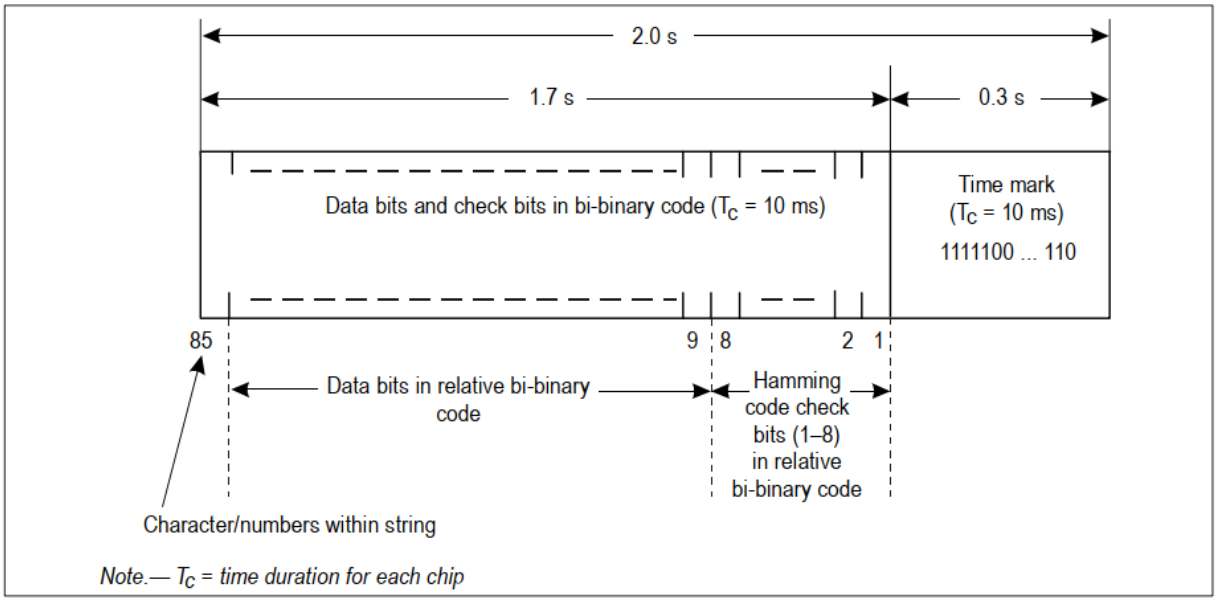

Figure 10. Data string structure

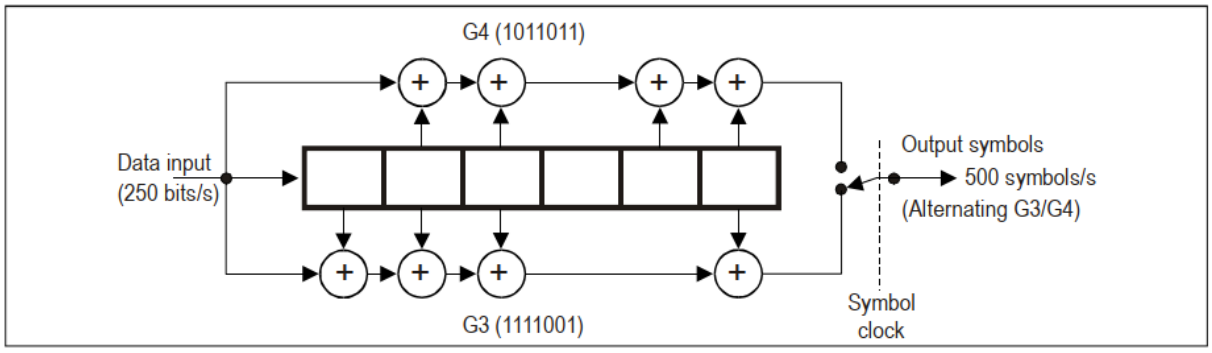

Figure 11. Convolutional encoding

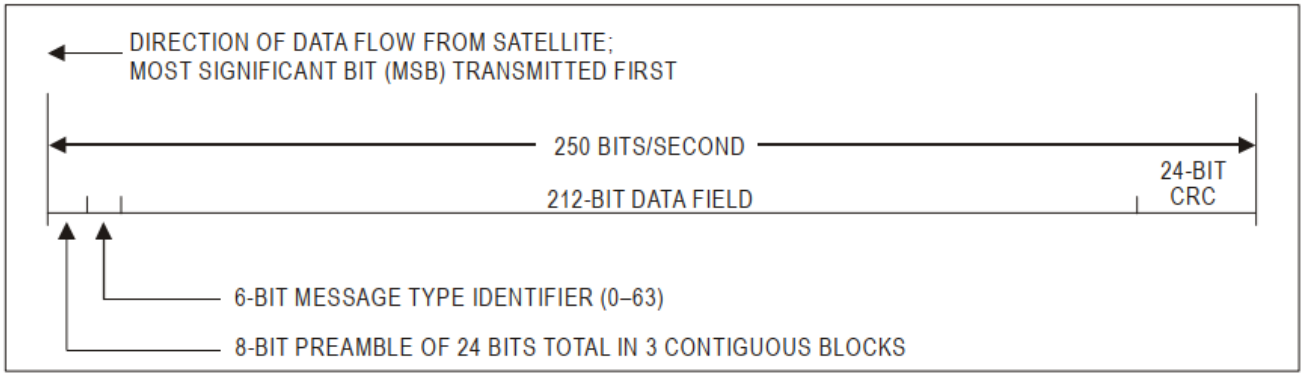

Figure 12. Data block format

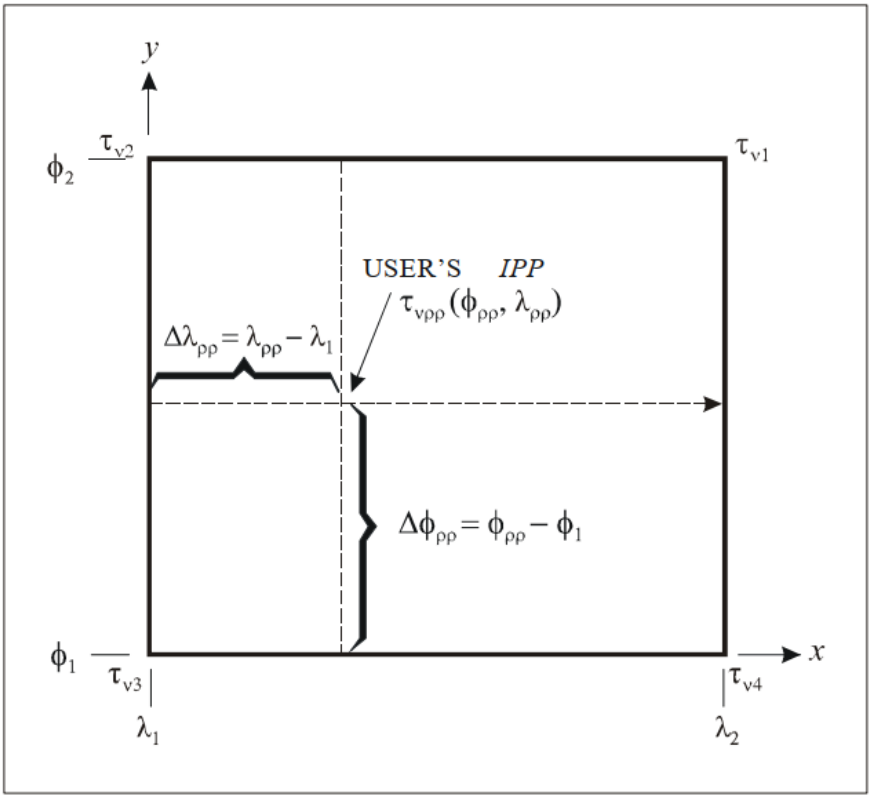

Figure 13. IGP numbering convention (four IGPs)

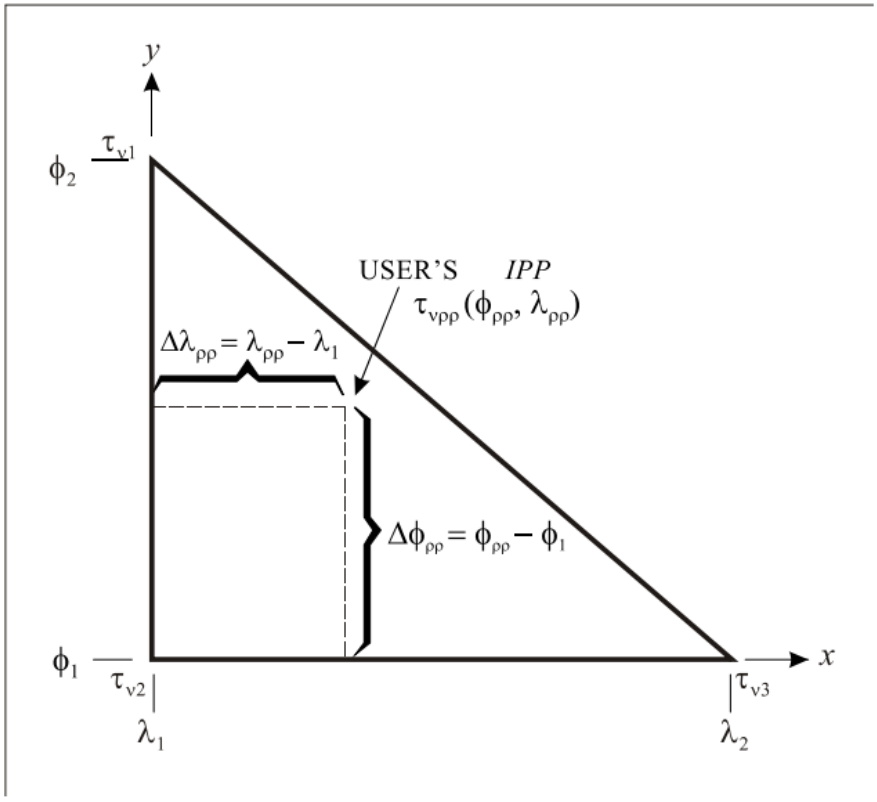

Figure14. IGP numbering convention (three IGPs)

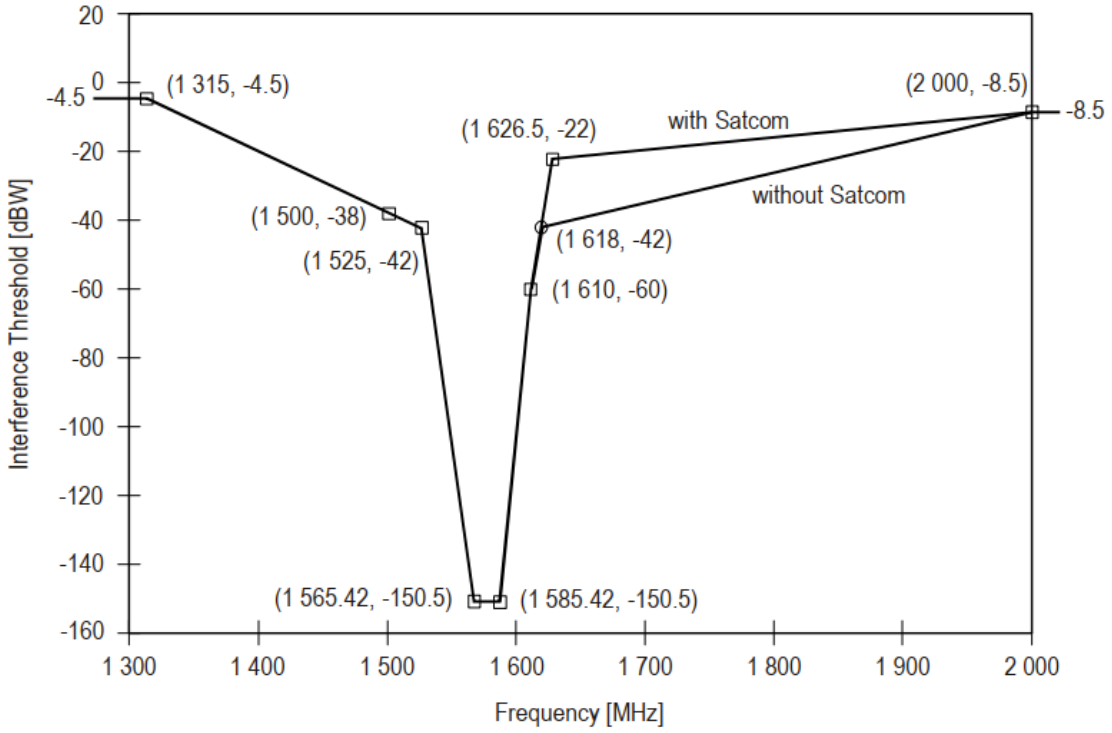

Figure 15. CW interference thresholds for GPS and SBAS receivers in steady-state navigation

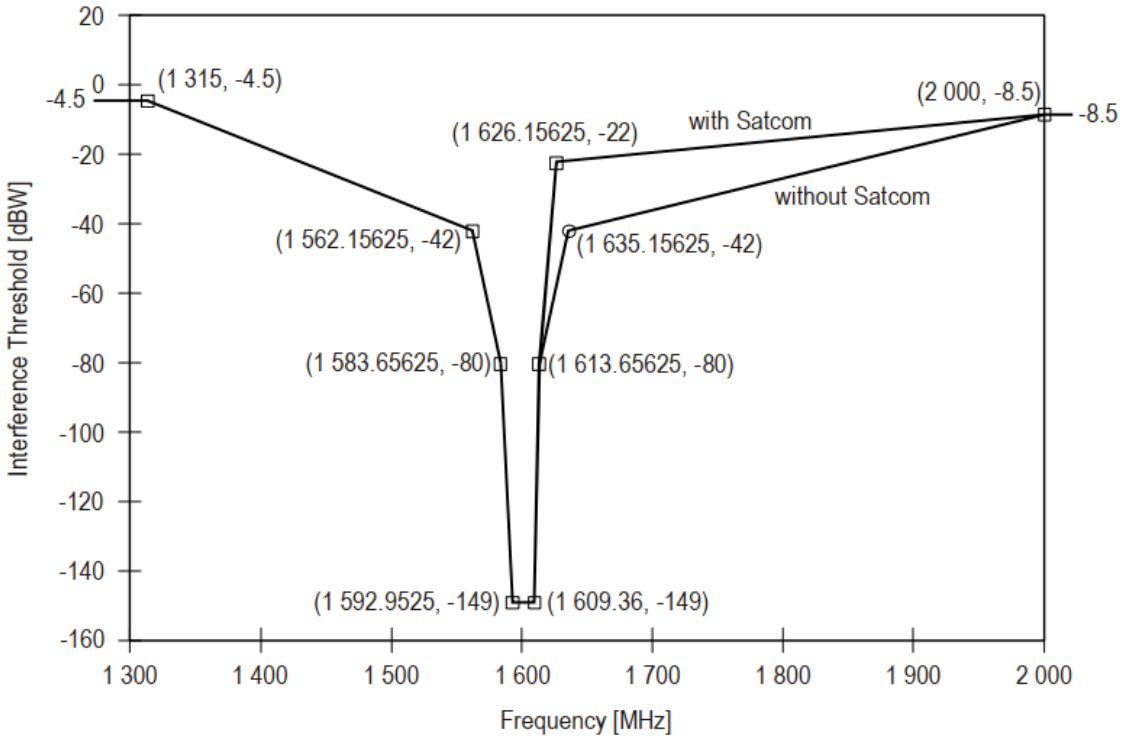

Figure 16. CW interference thresholds for GLONASS receivers in steady-state navigation

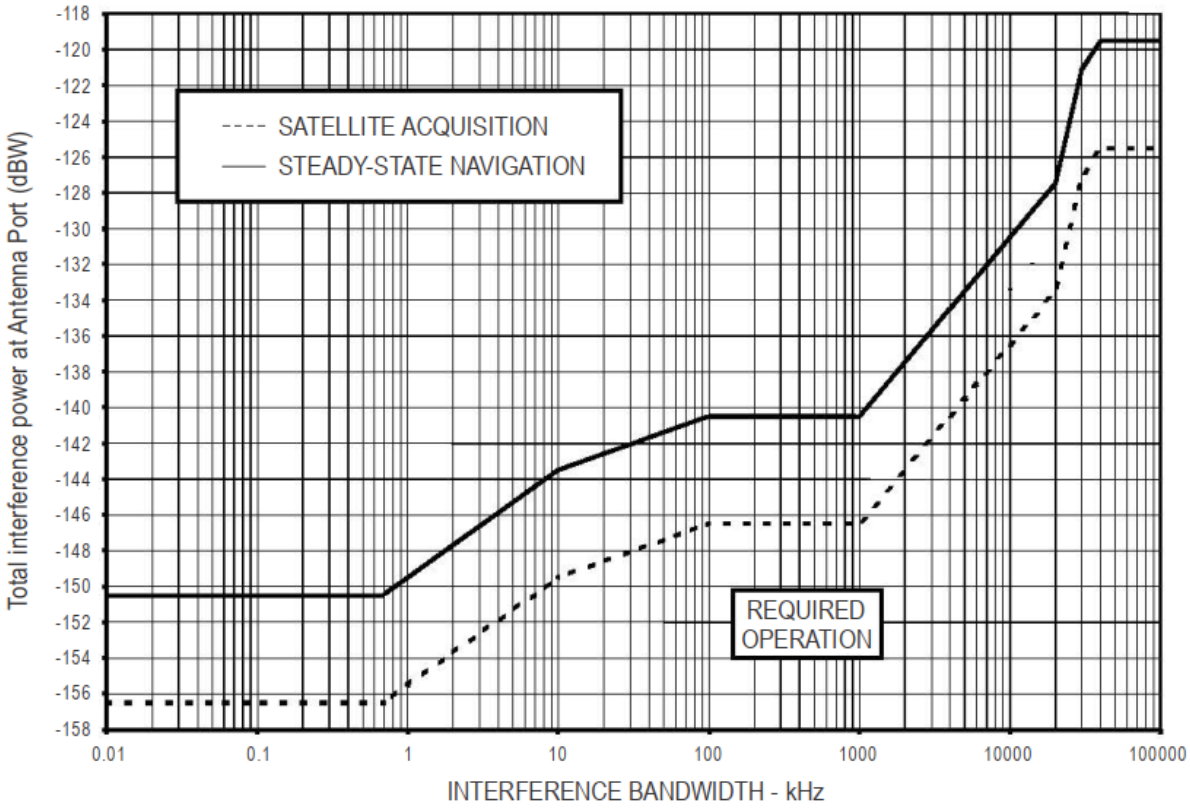

Figure 17. Interference thresholds versus bandwidth for GPS and SBAS receivers

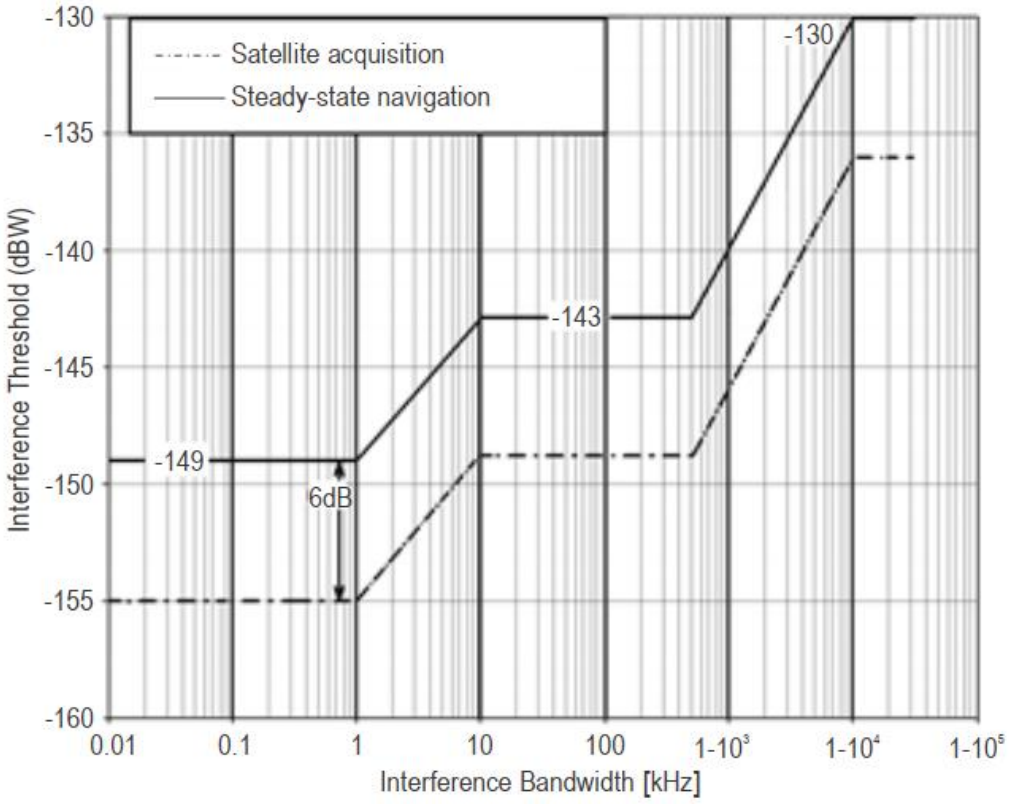

Figure 18. Interference thresholds versus bandwidth for GLONASS receivers

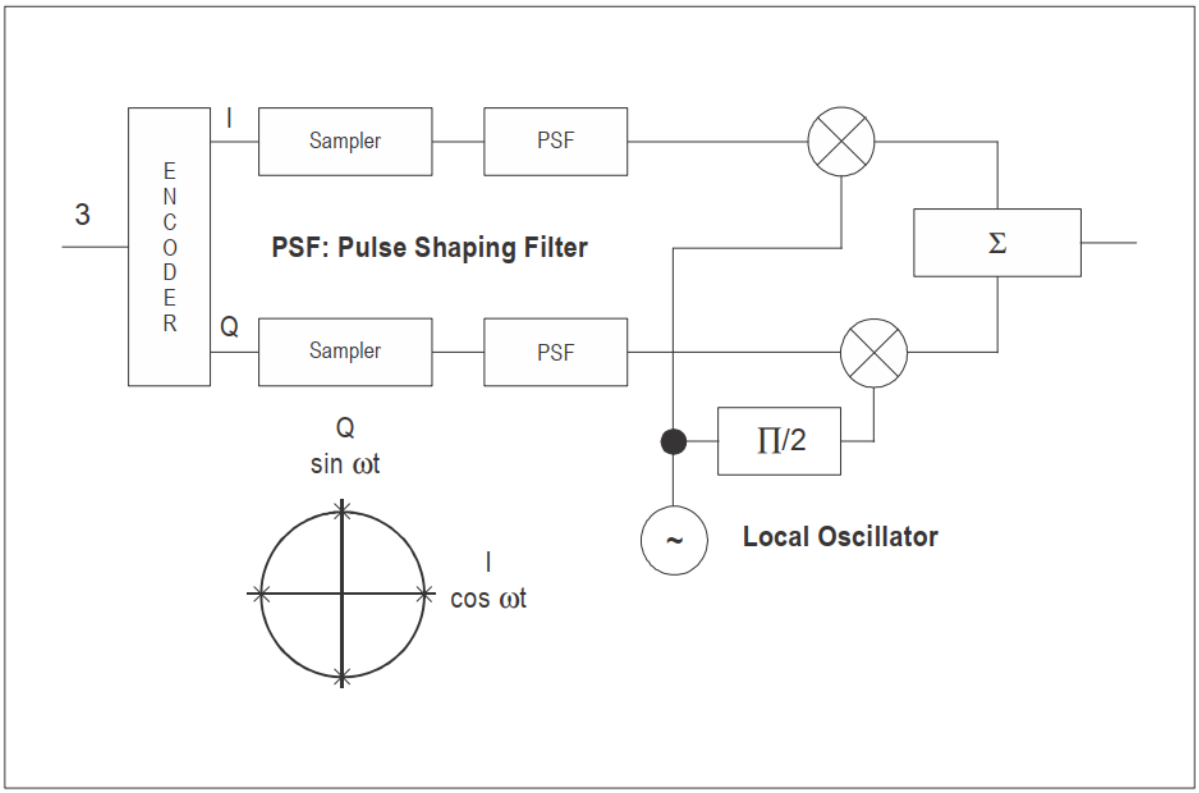

Figure 19. Example data modulation

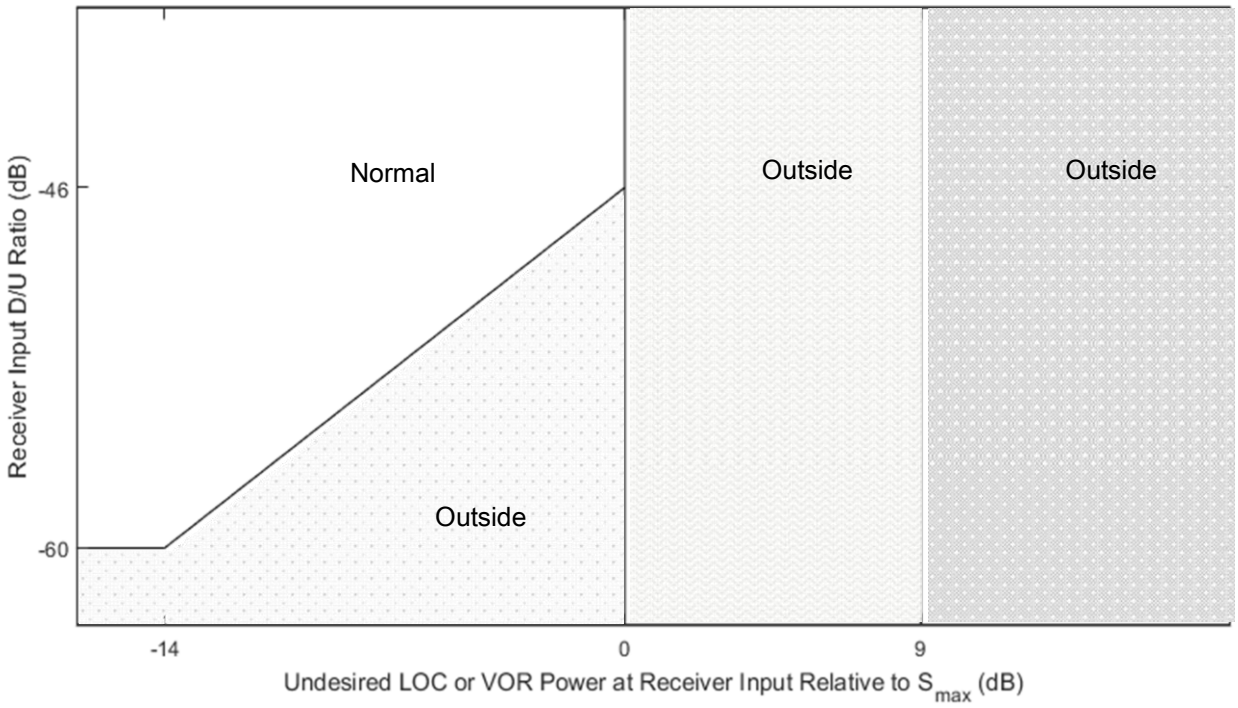

Note: *The region of the figure labelled "Normal Operation" is the one in which 3.6.8.2.2.6.4 applies, and consequently 3.6.8.2.2.3 is met (MFR<= 0.001). The lower boundary of the region is the line plotting the minimum acceptable D/U ratio specified in 3.6.8.2.2.6.4 as a function of the undesired power, for values of the undesired power up to Smax.*

In the other three regions of the figure, 3.6.8.2.2.6.4 does not apply. Consequently, 3.6.8.2.2.3 may not be met, and MFR may be as high as 1.

The region labelled "Outside Normal, I" is the one in which the D/U ratio is lower than the minimum acceptable value defined in 3.6.8.2.2.6.4 and the undesired power is lower or equal to Smax.

The region labelled "Outside Normal, II" is the one in which the undesired power is higher than Smax but lower than Smax + 9 dB. The requirement for receiver recovery from short-term excess undesired signal power specified in 3.6.8.2.2.6.5 applies in this region.

The region labelled "Outside Normal, III" is the one in which the undesired power is higher than Smax + 9 dB. Because this region is outside the expected operational environment, no receiver performance requirements apply.

Figure 20. GBAS VDB receiver regions of operation in the presence of an undesired signal in the fortieth or beyond adjacent 25 kHz channel